MADHURAM®


**Register Office**

**MADHURAM OVERSEAS**

4192, "F" Road, GIDC Phase III,
Jamnagar-361004, Gujarat (INDIA).

✉ : info@madhuramoverseas.com

🌐 : www.madhuramoverseas.com

**Sales Office**

**MADHURAM METALCRAFT**

Plot No: 3489, "G" Road, Phase III, GIDC Dared,
Jamnagar- 361004, Gujarat (INDIA)

✆ : +91 98091 56789

✉ : sales@madhuramoverseas.com


Follow us on :

MADHURAM®

# BRASS HARDWARE

## *Fittings*

Price List
2026



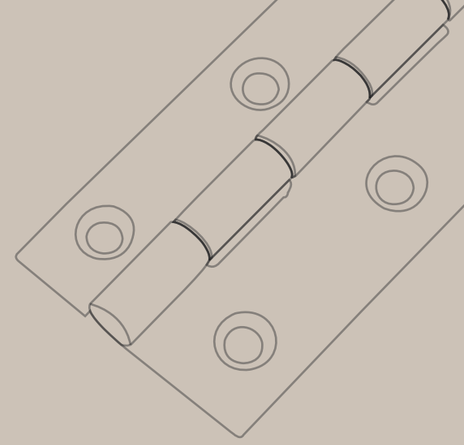

30+ years of Brand Trust

14+ Quality Tests & Certificates

7 YEARS Functional Warranty

Presence Accross 17+ Countries

# YES YOU CAN

**DESIGN YOUR SPACE WITH**

INNOVATIVE
CREATIVE
LUXURIOUS
ARTISTIC
FUTURISTIC
PRODUCTS

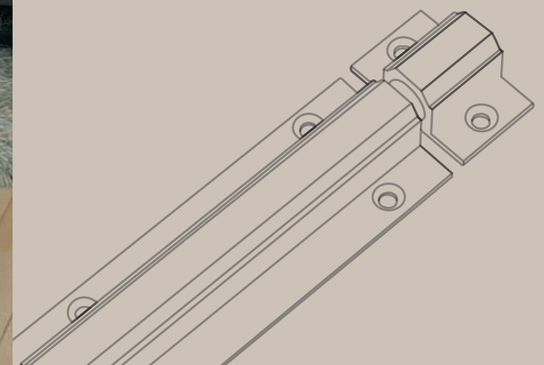

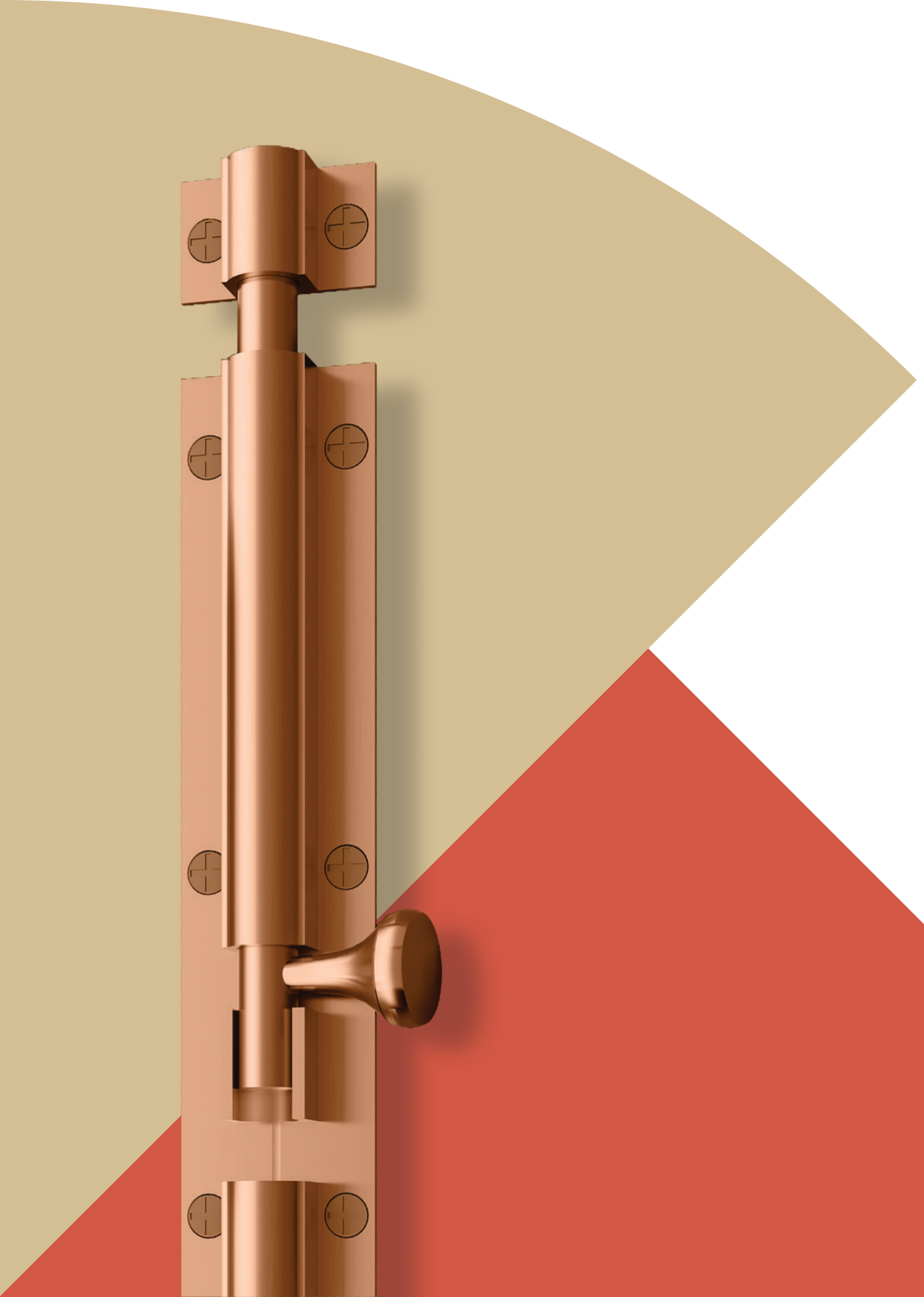

MADHURAM®

MADHURAM is a preeminent and well-known name in the architectural hardware solutions for both residential and commercial projects. Over the years, we have successfully brought creativity, innovation, and personalized charm into all of our ventures.

All of our products are personally curated after valuable insights from our customers. This has helped us identify and create handles that satisfy the luxury need of the hour. We assure you of its rarity and quality, you won't find it anywhere else.

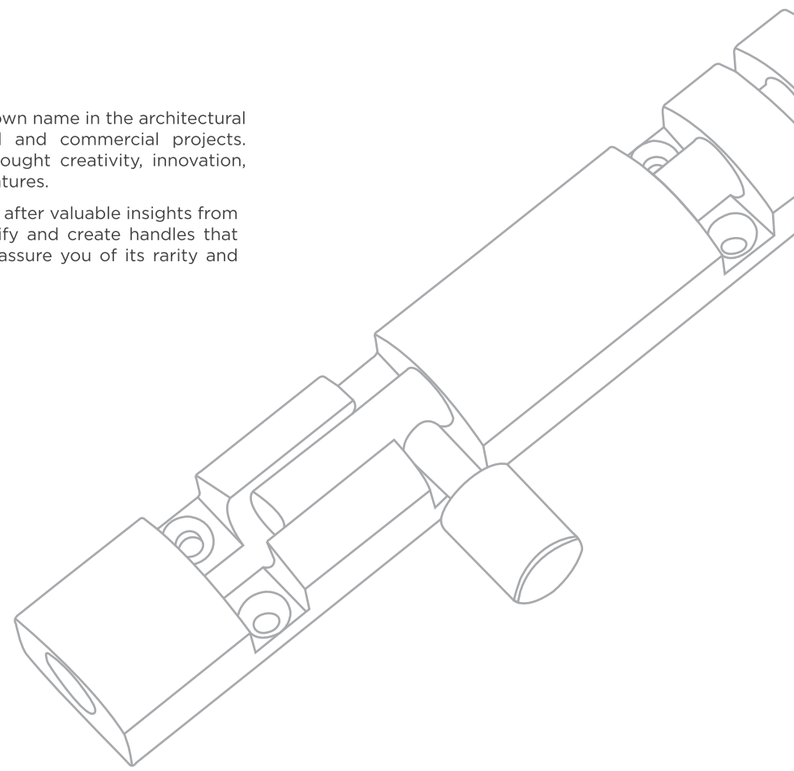

## *TO YOUR ADORABLE LIVING*

# NEW IDEAS

to new ideas. To surprising designs. To the modern reinvention of classic shapes. To the creation of new concepts. To accessories that can completely transform furniture. To innovative materials with a fashionable finish. To minuscule details that can make a huge difference. To designers that leave their mark in everything that they do. To production processes that are respectful to both people and the planet. To simple set-ups that provide sophisticated results. To handles that open up a world of infinite possibilities in decoration. To those who dream them up and to those who create them.

*TO YOUR ADORABLE LIVING*

# UP IN THE SKY

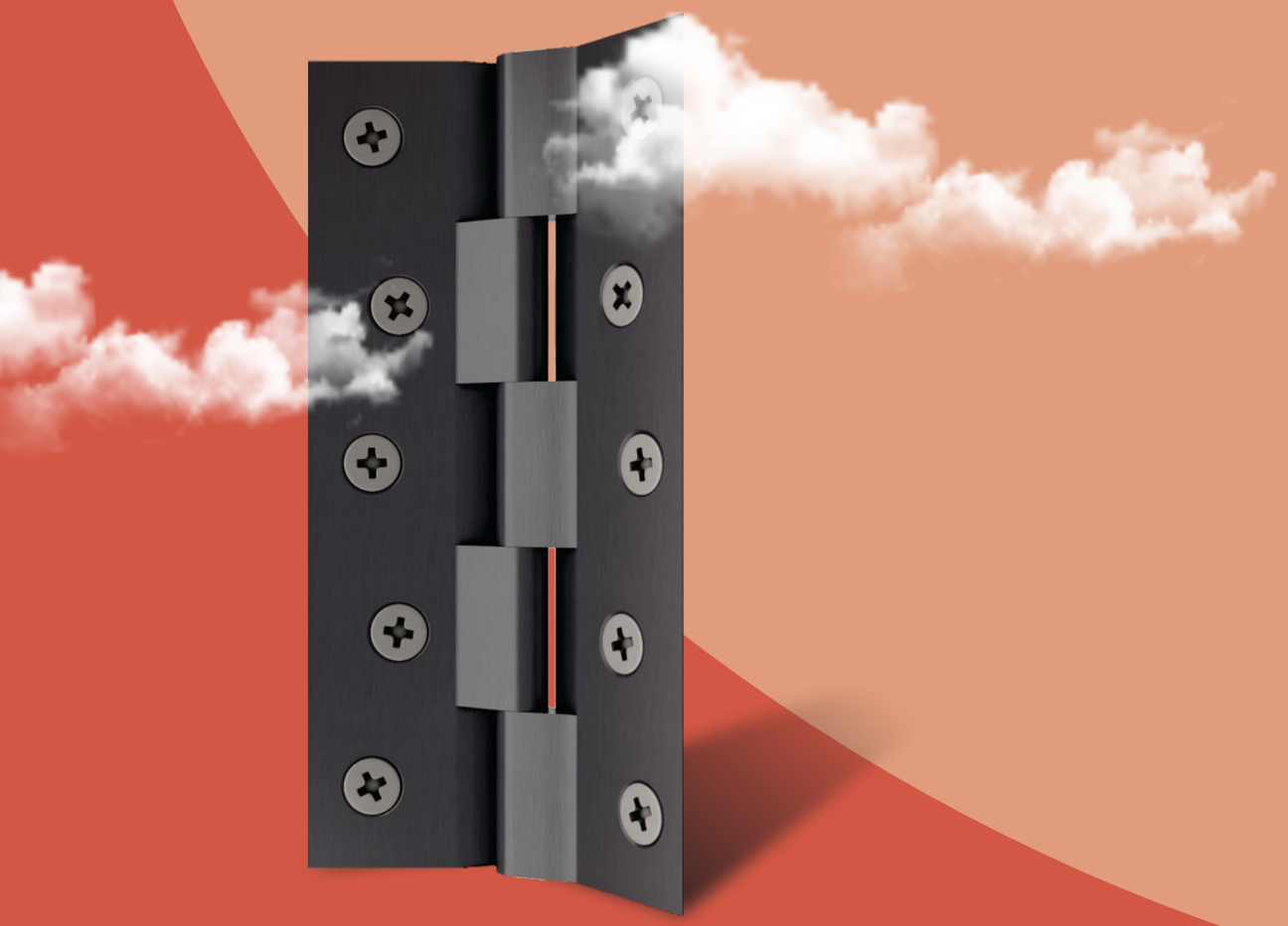

## CREATIVE MOMENTS

Everything starts with an artistic phase, the moment in which the imagination is released and new forms are created, which define new trends. For contemporary handles, the designer is inspired by the architecture that surrounds him. Whilst for other handles they draw their inspiration from the most important ongoing artistic trends, to create something out of the box. Thus, maintaining the originality and authenticity of each product.

MADHURAM®

All of our products satisfy various criteria for its functioning for the consumer. Our customers care about the aesthetics of the products used in their space and their needs are our priority. Trusted quality and incorporating features that contain the capacity to meet all consumer requirements is what makes us a trusted name in the industry. All our products perform their tasks easily in a complete and effective way.

# Content

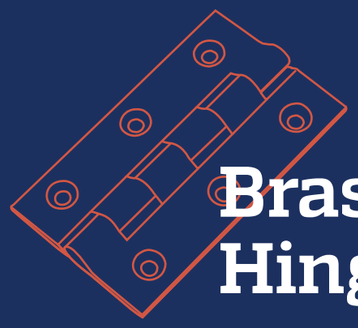


Brass Hinges 01


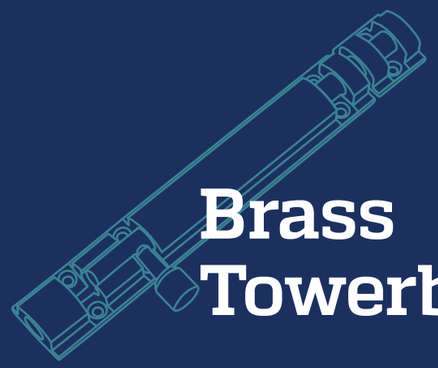


Brass Towerbolt 15


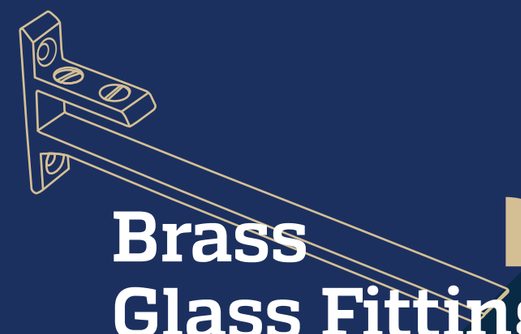


Brass Glass Fittings 47





Brass Fittings 31

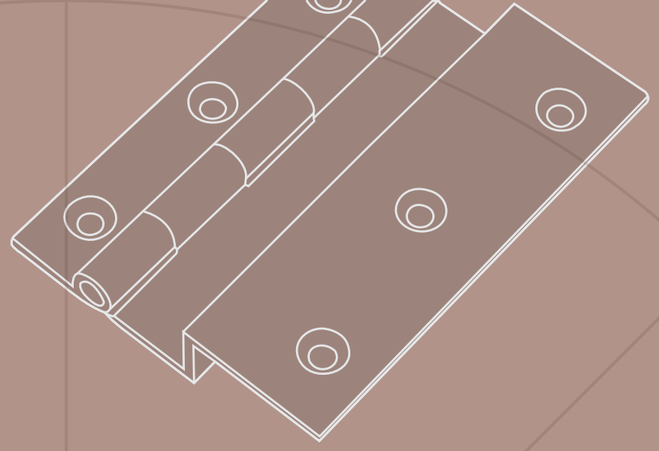

# Brass Hinges

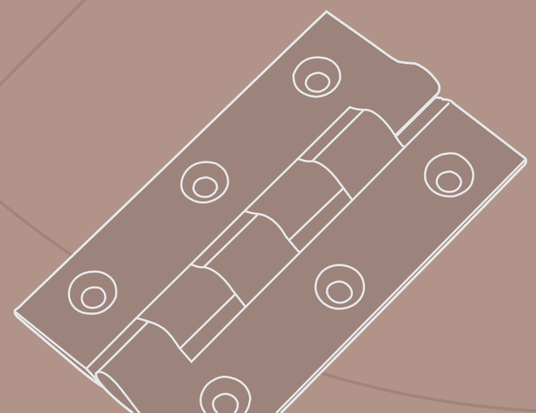



MADHURAM®

A DESIGN THAT IS EQUIPPED WITH
SMOOTH FUNCTIONALITY AND ENDURING ADAPTABILITY.



# BRASS HINGES **BUTT**

## THICKNESS 3/32

| CODE No. | SIZE MM | SIZE INCHES | PCS / BOX | PCS / CASE | SCREW SIZE |
|---|---|---|---|---|---|
| **AB01** | 75x9x16 | 3X3/8X5/8 | 20 | 240 | 4x19 |
| **AB02** | 75x16x16 | 3X5/8X5/8 | 20 | 240 | 4x19 |
| **AB03** | 75x12x19 | 3X1/2X3/4 | 20 | 240 | 4x19 |
| **AB04** | 75x19x19 | 3X3/4X3/4 | 20 | 240 | 4x19 |
| **AB07** | 75x12x25 | 3X1/2X1 | 20 | 240 | 4x19 |
| **AB08** | 75x19x25 | 3x3/4x1 | 20 | 240 | 4x19 |
| **AB09** | 75x25x25 | 3x1x1 | 20 | 240 | 4x19 |
| **AB10** | 75x12x38 | 3x1/2x1.1/2 | 20 | 240 | 4x19 |
| **AB11** | 75x19x38 | 3x3/4x1.1/2 | 20 | 240 | 4x19 |
| **AB12** | 100x9x16 | 4x3/8x5/8 | 20 | 240 | 4x19 |
| **AB13** | 100x16x16 | 4x5/8x5/8 | 20 | 240 | 4x19 |
| **AB14** | 100x12x19 | 4X1/2X3/4 | 20 | 240 | 4x19 |
| **AB15** | 100x19x19 | 4X3/4X3/4 | 20 | 240 | 4x19 |
| **AB18** | 100x12x25 | 4X1/2X1 | 20 | 240 | 4x19 |
| **AB19** | 100x19x25 | 4x3/4x1 | 20 | 240 | 4x19 |
| **AB20** | 100x25x25 | 4x1x1 | 20 | 240 | 4x19 |
| **AB21** | 100x12x38 | 4x1/2x1.1/2 | 20 | 240 | 4x19 |
| **AB22** | 100x19x38 | 4x3/4x1.1/2 | 20 | 240 | 4x19 |



# BRASS HINGES **RAILWAY**

## THICKNESS 3/32

| CODE No. | SIZE MM | SIZE INCHES | PCS / BOX | PCS / CASE | SCREW SIZE |
|---|---|---|---|---|---|
| **BR01** | 75x19x19 | 3x3/4x3/4 | 20 | 240 | 4x19 |





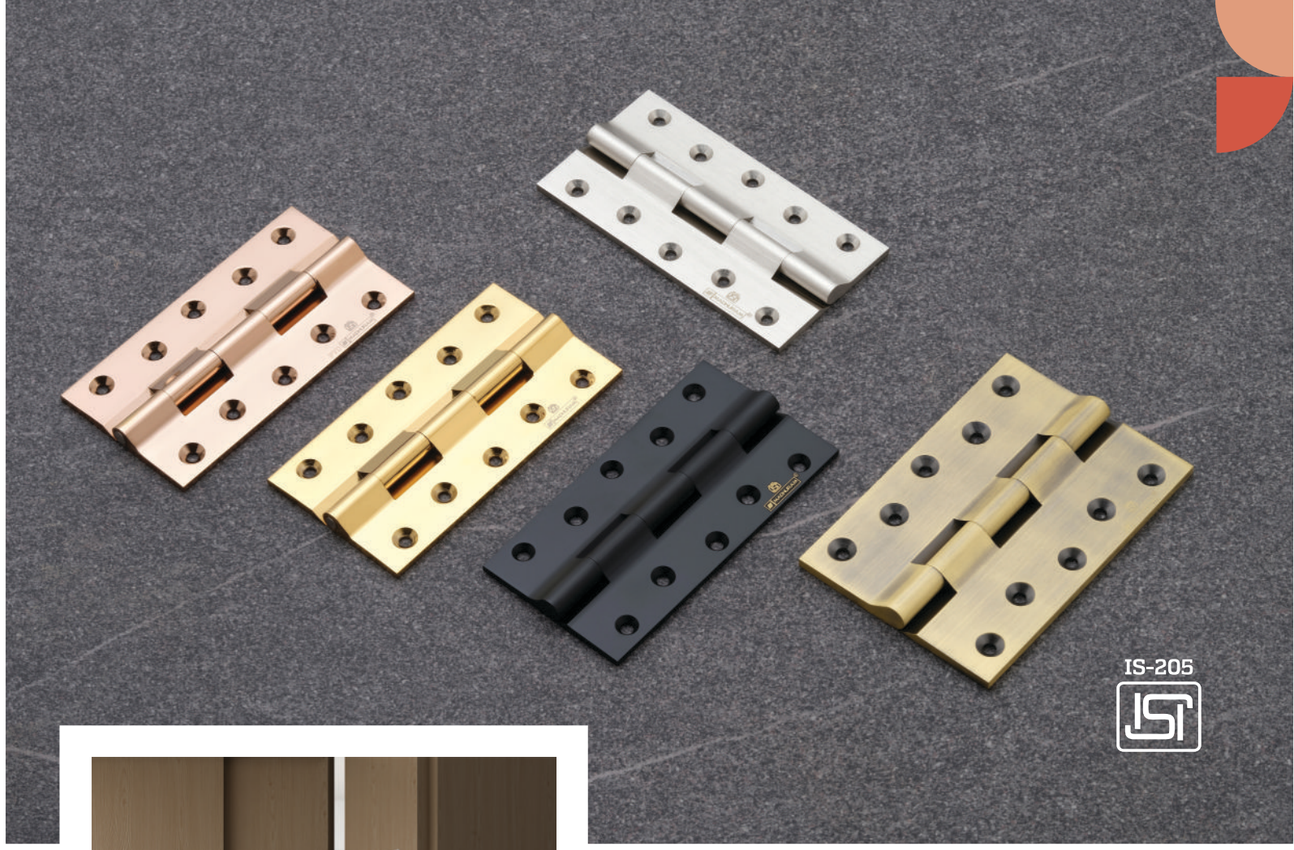




SMOOTH MOVEMENT

DESIGNED TO GIVE YOUR DOOR A SMOOTH, SOFT, AND EASY MOVEMENT SUITABLE FOR ALL WEATHER CONDITIONS.

# BRASS RLY HINGES **LOCKING**

## THICKNESS 1/8

| CODE No. | SIZE MM | SIZE INCHES | PCS / BOX | PCS / CASE | SCREW SIZE |
|---|---|---|---|---|---|
| **IR01** | 75x22x22 | 3x7/8x7/8 | 20 | 240 | 8x25 |
| **IR02** | 75x25x25 | 3x1x1 | 20 | 240 | 8x25 |
| **IR04** | 100x22x22 | 4x7/8x7/8 | 10 | 160 | 8x25 |
| **IR05** | 100x25x25 | 4x1x1 | 5 | 80 | 8x25 |
| **IR06** | 100x28x28 | 4x1.1/8x1.1/8 | 5 | 80 | 8x25 |
| **IR07** | 125x25x25 | 5x1x1 | 5 | 60 | 8x25 |
| **IR08** | 125x28x28 | 5x1.1/8x1.1/8 | 5 | 60 | 8x25 |



# BRASS RLY HINGES
# LOCKING

## THICKNESS 5/32

| CODE No. | SIZE MM | SIZE INCHES | PCS / BOX | PCS / CASE | SCREW SIZE |
|---|---|---|---|---|---|
| **IR11** | 75x28x28 | 3x1.1/8X5/32 | 10 | 120 | 8x32 |
| **IR12** | 75x31x31 | 3x1.1/4X5/32 | 10 | 120 | 8x32 |
| **IR13** | 100x25x25 | 4x1x5/32 | 5 | 80 | 8x32 |
| **IR14** | 100x28x28 | 4x1.1/8x5/32 | 5 | 80 | 8x32 |
| **IR15** | 100x31x31 | 4x1.1/4x5/32 | 5 | 80 | 8x32 |
| **IR16** | 125x25x25 | 5x1x5/32 | 5 | 60 | 8x32 |
| **IR17** | 125x28x28 | 5x1.1/8x5/32 | 5 | 60 | 8x32 |
| **IR18** | 125x31x31 | 5x1.1/4x5/32 | 5 | 60 | 8x32 |
| **IR79** | 125x38x38 | 5X1.1/2X1.1/2 | 5 | 60 | 8x32 |
| **IR19** | 150x28x28 | 6x1.1/8x5/32 | 5 | 50 | 8x32 |
| **IR20** | 150x31x31 | 6x1.1/4x5/32 | 5 | 50 | 8x32 |
| **IR81** | 150x38x38 | 6x1.1/2x1.1/2 | 5 | 50 | 8x32 |

## THICKNESS 3/16

| CODE No. | SIZE MM | SIZE INCHES | PCS / BOX | PCS / CASE | SCREW SIZE |
|---|---|---|---|---|---|
| **IR28** | 100x38x38 | 4x1.1/2x1.1/2 | 5 | 80 | 8x32 |
| **IR29** | 125x31x31 | 5x1.1/4x1.1/4 | 5 | 60 | 8x32 |
| **IR30** | 125x38x38 | 5x1.1/2x1.1/2 | 5 | 60 | 8x32 |
| **IR74** | 125x50x50 | 5x2x2 | 5 | 40 | 8x32 |
| **IR31** | 150x31x31 | 6x1.1/4x1.1/4 | 5 | 50 | 8x32 |
| **IR32** | 150x38x38 | 6x1.1/2x1.1/2 | 5 | 50 | 8x32 |
| **IR72** | 150x50x50 | 6x2x2 | 5 | 30 | 8x32 |
| **IR33** | 200x31x31 | 8x1.1/4x1.1/4 | 5 | 30 | 8x32 |
| **IR34** | 200x38x38 | 8x1.1/2x1.1/2 | 5 | 30 | 8x32 |
| **IR75** | 200x50x50 | 8x2x2 | 5 | 20 | 8x32 |
| **IR35** | 250x38x38 | 10x1.1/2x1.1/2 | 3 | 24 | 8x32 |
| **IR76** | 250x50x50 | 10x2x2 | 3 | 24 | 8x32 |
| **IR77** | 300x50x50 | 12x2x2 | 3 | 24 | 8x32 |

## EXTRA HEAVY THICKNESS 6 MM

| CODE No. | SIZE MM | SIZE INCHES | PCS / BOX | PCS / CASE | SCREW SIZE |
|---|---|---|---|---|---|
| **IR91** | 125x31x31 | 5x1.1/4x1.1/4 | 4 | 48 | 8x32 |
| **IR92** | 150x31x31 | 6x1.1/4x1.1/4 | 4 | 40 | 8x32 |
| **IR93** | 125x38x38 | 5x1.1/2x1.1/2 | 4 | 48 | 8x32 |
| **IR94** | 150x38x38 | 6x1.1/2x1.1/2 | 4 | 40 | 8x32 |
| **IR95** | 200x38x38 | 8x1.1/2x1.1/2 | 4 | 24 | 8x32 |
| **IR96** | 150x50x50 | 6x2x2 | 4 | 24 | 8x32 |
| **IR97** | 200x50x50 | 8x2x2 | 4 | 16 | 8x32 |

# BRASS HINGES
# **BEARING**



| CODE No. | SIZE MM | SIZE INCHES | PCS / BOX | PCS / CASE | SCREW SIZE |
|---|---|---|---|---|---|
| **3MM** | | | | | |
| **JB01** | 75x50x62 | 3X2X2.5 | 20 | 240 | 8x32 |
| **JB02** | 100x75 | 4x3 | 5 | 80 | 8x32 |
| **JB03** | 125x75 | 5x3 | 5 | 60 | 8x32 |
| **4MM** | | | | | |
| **JB05** | 100x75 | 4x3 | 5 | 80 | 8x32 |
| **JB06** | 125x75 | 5x3 | 5 | 60 | 8x32 |
| **JB07** | 150x75 | 6x3 | 5 | 50 | 8x32 |
| **5MM** | | | | | |
| **JB13** | 125x88 | 5X3.1/2 | 5 | 60 | 8x32 |
| **JB14** | 150x88 | 6X3.1/2 | 5 | 50 | 8x32 |
| **JB15** | 200x88 | 8x3.1/2 | 5 | 30 | 8x32 |
| **JB16** | 250x88 | 10x3.1/2 | 3 | 24 | 8x32 |
| **JB17** | 300x88 | 12x3.1/2 | 3 | 24 | 8x32 |
| **JB18** | 125x100 | 5x4 | 5 | 60 | 8x32 |
| **JB19** | 150x100 | 6X4 | 5 | 50 | 8x32 |
| **JB20** | 200x100 | 8X4 | 5 | 30 | 8x32 |
| **JB22** | 300x100 | 12X4 | 3 | 24 | 8x32 |
| **JB27** | 300x125 | 12X5 | 3 | 24 | 8x32 |

# BRASS HINGES
# **BEARING ITALIAN TIP**



| CODE No. | SIZE MM | SIZE INCHES | PCS / BOX | PCS / CASE | SCREW SIZE |
|---|---|---|---|---|---|
| **3MM** | | | | | |
| **JB32** | 75x50x62 | 3X2X2.5 | 20 | 240 | 8x32 |
| **JB33** | 100x75 | 4x3 | 5 | 80 | 8x32 |
| **JB34** | 125x75 | 5x3 | 5 | 60 | 8x32 |
| **4MM** | | | | | |
| **JB36** | 100x75 | 4x3 | 5 | 80 | 8x32 |
| **JB37** | 125x75 | 5x3 | 5 | 60 | 8x32 |
| **JB38** | 150x75 | 6x3 | 5 | 50 | 8x32 |
| **5MM** | | | | | |
| **JB44** | 125x88 | 5X3.1/2 | 5 | 60 | 8x32 |
| **JB45** | 150x88 | 6X3.1/2 | 5 | 50 | 8x32 |
| **JB46** | 200x88 | 8x3.1/2 | 5 | 30 | 8x32 |
| **JB47** | 250x88 | 10x3.1/2 | 3 | 24 | 8x32 |
| **JB48** | 300x88 | 12x3.1/2 | 3 | 24 | 8x32 |
| **JB49** | 125x100 | 5x4 | 5 | 60 | 8x32 |
| **JB50** | 150x100 | 6X4 | 5 | 50 | 8x32 |
| **JB51** | 200x100 | 8X4 | 5 | 30 | 8x32 |
| **JB53** | 300x100 | 12X4 | 3 | 24 | 8x32 |
| **JB58** | 300x125 | 12X5 | 3 | 24 | 8x32 |

SMOOTH MOVEMENT



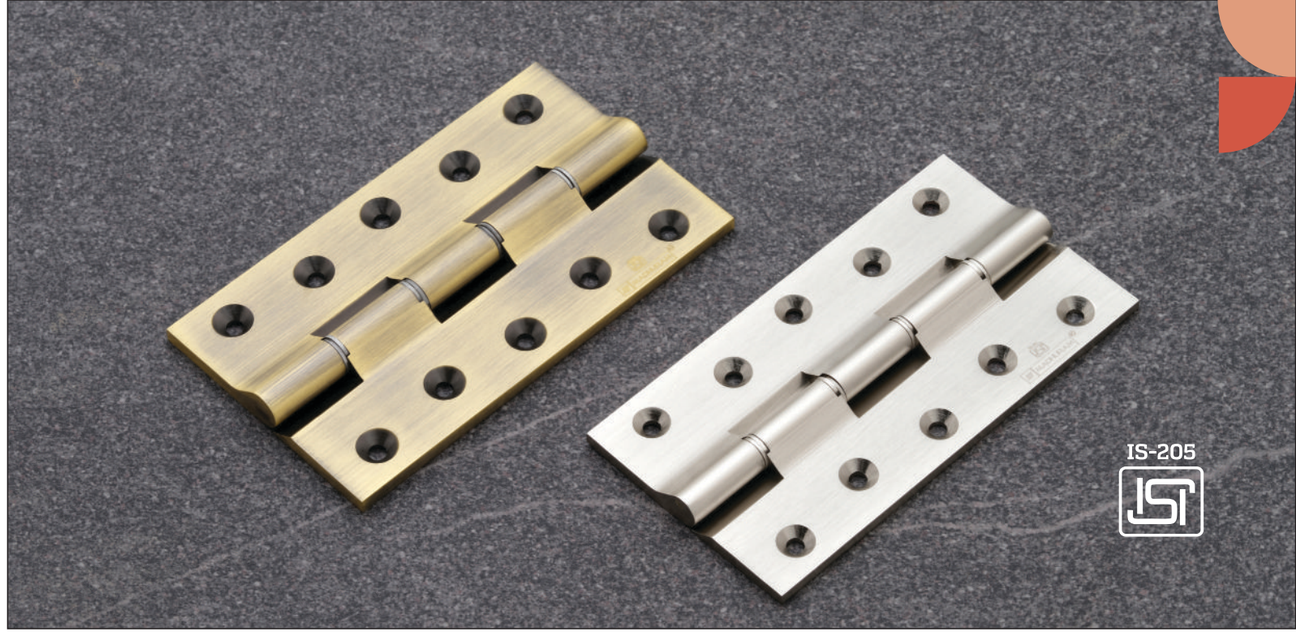


## THICKNESS 1/8

| CODE No. | SIZE MM | SIZE INCHES | PCS / BOX | PCS / CASE | SCREW SIZE |
|---|---|---|---|---|---|
| **BR39** | 75x25x25 | 3x1x1 | 20 | 240 | 8x25 |
| **BR41** | 100x25x25 | 4x1x1 | 5 | 80 | 8x25 |
| **BR42** | 100x28x28 | 4x1.1/8x1.1/8 | 5 | 80 | 8x25 |
| **BR43** | 125x25x25 | 5x1x1 | 5 | 60 | 8x25 |
| **BR44** | 125x28x28 | 5x1.1/8x1.1/8 | 5 | 60 | 8x25 |

## THICKNESS 5/32

| CODE No. | SIZE MM | SIZE INCHES | PCS / BOX | PCS / CASE | SCREW SIZE |
|---|---|---|---|---|---|
| **BR49** | 100x25x25 | 4x1x1 | 5 | 80 | 8x32 |
| **BR50** | 100x28x28 | 4x1.1/8x1.1/8 | 5 | 80 | 8x32 |
| **BR51** | 100x31x31 | 4x1.1/4x1.1/4 | 5 | 80 | 8x32 |
| **BR52** | 125x25x25 | 5x1x1 | 5 | 60 | 8x32 |
| **BR53** | 125x28x28 | 5x1.1/8x1.1/8 | 5 | 60 | 8x32 |
| **BR54** | 125x31x31 | 5x1.1/4x1.1/4 | 5 | 60 | 8x32 |
| **BR55** | 150x28x28 | 6x1.1/8x1.1/8 | 5 | 50 | 8x32 |
| **BR56** | 150x31x31 | 6x1.1/4x1.1/4 | 5 | 50 | 8x32 |

## THICKNESS 3/16

| CODE No. | SIZE MM | SIZE INCHES | PCS / BOX | PCS / CASE | SCREW SIZE |
|---|---|---|---|---|---|
| **BR64** | 100x38x38 | 4x1.1/2x1.1/2 | 5 | 80 | 8x32 |
| **BR65** | 125x31x31 | 5x1.1/4x1.1/4 | 5 | 60 | 8x32 |
| **BR66** | 125x38x38 | 5x1.1/2x1.1/2 | 5 | 60 | 8x32 |
| **BR115** | 125x50x50 | 5x2x2 | 5 | 40 | 8x32 |
| **BR67** | 150x31x31 | 6x1.1/4x1.1/4 | 5 | 50 | 8x32 |
| **BR68** | 150x38x38 | 6x1.1/2x1.1/2 | 5 | 50 | 8x32 |
| **BR116** | 150x50x50 | 6x2x2 | 5 | 30 | 8x32 |
| **BR69** | 200x31x31 | 8x1.1/4x1.1/4 | 5 | 30 | 8x32 |
| **BR70** | 200x38x38 | 8x1.1/2x1.1/2 | 5 | 30 | 8x32 |
| **BR117** | 200x50x50 | 8x2x2 | 5 | 20 | 8x32 |

# BRASS RLY HINGES
# **WASHER**

SMOOTH MOVEMENT

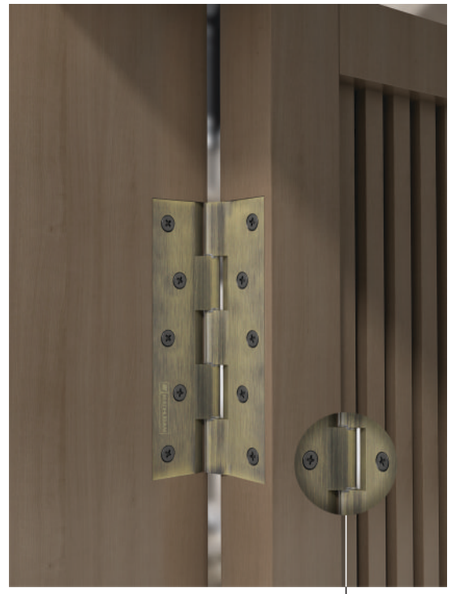

EXPERIENCE THE
REAL STRENGTH



## THICKNESS 2 MM

| CODE No. | SIZE MM | SIZE INCHES | PCS / BOX | PCS / CASE | SCREW SIZE |
|---|---|---|---|---|---|
| **6MM** | | | | | |
| **CL77** | 75x9 | 3x3/8 | 10 | 200 | 6x19 |
| **CL79** | 75x12 | 3x1/2 | 10 | 200 | 6x19 |
| **CL80** | 75x19 | 3x3/4 | 10 | 200 | 6x19 |
| **CL81** | 75x25 | 3x1 | 10 | 200 | 6x19 |
| **CL83** | 100x9 | 4x3/8 | 10 | 200 | 6x19 |
| **CL85** | 100x12 | 4x1/2 | 10 | 200 | 6x19 |
| **CL86** | 100x19 | 4x3/4 | 10 | 200 | 6x19 |
| **CL87** | 100x25 | 4x1 | 10 | 200 | 6x19 |
| **12MM** | | | | | |
| **CL89** | 75x9 | 3x3/8 | 10 | 200 | 6x19 |
| **CL91** | 75x12 | 3x1/2 | 10 | 200 | 6x19 |
| **CL92** | 75x19 | 3x3/4 | 10 | 200 | 6x19 |
| **CL93** | 75x25 | 3x1 | 10 | 200 | 6x19 |
| **CL95** | 100x9 | 4x3/8 | 10 | 200 | 6x19 |
| **CL97** | 100x12 | 4x1/2 | 10 | 200 | 6x19 |
| **CL98** | 100x19 | 4x3/4 | 10 | 200 | 6x19 |
| **CL99** | 100x25 | 4x1 | 10 | 200 | 6x19 |
| **19MM** | | | | | |
| **CL101** | 75x9 | 3x3/8 | 10 | 200 | 6x19 |
| **CL103** | 75x12 | 3x1/2 | 10 | 200 | 6x19 |
| **CL104** | 75x19 | 3x3/4 | 10 | 200 | 6x19 |
| **CL105** | 75x25 | 3x1 | 10 | 200 | 6x19 |
| **CL107** | 100x9 | 4x3/8 | 10 | 200 | 6x19 |
| **CL109** | 100x12 | 4x1/2 | 10 | 200 | 6x19 |
| **CL110** | 100x19 | 4x3/4 | 10 | 200 | 6x19 |
| **CL111** | 100x25 | 4x1 | 10 | 200 | 6x19 |
| **25MM** | | | | | |
| **CL114** | 75x12 | 3x1/2 | 10 | 200 | 6x19 |
| **CL115** | 75x19 | 3x3/4 | 10 | 200 | 6x19 |
| **CL116** | 75x25 | 3x1 | 10 | 200 | 6x19 |
| **CL119** | 100x12 | 4x1/2 | 10 | 200 | 6x19 |
| **CL120** | 100x19 | 4x3/4 | 10 | 200 | 6x19 |
| **CL121** | 100x25 | 4x1 | 10 | 200 | 6x19 |



# BRASS HINGES **L - LOCKING**

SMOOTH MOVEMENT



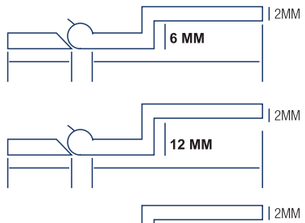


## THICKNESS 2.5 MM

| CODE No. | SIZE MM | SIZE INCHES | PCS / BOX | PCS / CASE | SCREW SIZE |
|---|---|---|---|---|---|
| **6MM** | | | | | |
| **CL47** | 75x9 | 3x3/8 | 10 | 200 | 6x19 |
| **CL48** | 75x12 | 3x1/2 | 10 | 200 | 6x19 |
| **CL49** | 75x19 | 3x3/4 | 10 | 200 | 6x19 |
| **CL50** | 75x25 | 3x1 | 10 | 200 | 6x19 |
| **CL51** | 100x9 | 4x3/8 | 10 | 200 | 6x19 |
| **CL52** | 100x12 | 4x1/2 | 10 | 200 | 6x19 |
| **CL53** | 100x19 | 4x3/4 | 10 | 200 | 6x19 |
| **Cl54** | 100x25 | 4x1 | 10 | 200 | 6x19 |
| **12MM** | | | | | |
| **CL55** | 75x9 | 3x3/8 | 10 | 200 | 6x19 |
| **CL56** | 75x12 | 3x1/2 | 10 | 200 | 6x19 |
| **CL57** | 75x19 | 3x3/4 | 10 | 200 | 6x19 |
| **CL58** | 75x25 | 3x1 | 10 | 200 | 6x19 |
| **CL59** | 100x9 | 4x3/8 | 10 | 200 | 6x19 |
| **CL60** | 100x12 | 4x1/2 | 10 | 200 | 6x19 |
| **CL61** | 100x19 | 4x3/4 | 10 | 200 | 6x19 |
| **Cl62** | 100x25 | 4x1 | 10 | 200 | 6x19 |
| **19MM** | | | | | |
| **CL63** | 75x9 | 3x3/8 | 10 | 200 | 6x19 |
| **CL64** | 75x12 | 3x1/2 | 10 | 200 | 6x19 |
| **CL65** | 75x19 | 3x3/4 | 10 | 200 | 6x19 |
| **CL66** | 75x25 | 3x1 | 10 | 200 | 6x19 |
| **CL67** | 100x9 | 4x3/8 | 10 | 200 | 6x19 |
| **CL68** | 100x12 | 4x1/2 | 10 | 200 | 6x19 |
| **CL69** | 100x19 | 4x3/4 | 10 | 200 | 6x19 |
| **Cl70** | 100x25 | 4x1 | 10 | 200 | 6x19 |
| **25MM** | | | | | |
| **CL71** | 75x12 | 3x1/2 | 10 | 200 | 6x19 |
| **CL72** | 75x19 | 3x3/4 | 10 | 200 | 6x19 |
| **CL73** | 75x25 | 3x1 | 10 | 200 | 6x19 |
| **CL74** | 100x12 | 4x1/2 | 10 | 200 | 6x19 |
| **CL75** | 100x19 | 4x3/4 | 10 | 200 | 6x19 |
| **CL76** | 100x25 | 4x1 | 10 | 200 | 6x19 |

# BRASS HINGES **Z**

| CODE No. | SIZE MM | SIZE INCHES | PCS / BOX | PCS / CASE | SCREW SIZE |
|---|---|---|---|---|---|
| **DZ01** | 75x12x12 | 3x1/2x12MM | 10 | 200 | 6x19 |
| **DZ02** | 100x12x12 | 4x1/2x12MM | 10 | 200 | 6x19 |
| **DZ03** | 75x19x18 | 3x3/4x18MM | 10 | 200 | 6x19 |
| **DZ04** | 100x19x18 | 4x3/4x18MM | 10 | 200 | 6x19 |
| **DZ05** | 75x25x25 | 3x1x25MM | 10 | 200 | 6x19 |
| **DZ06** | 100x25x25 | 4x1x25MM | 10 | 200 | 6x19 |



# BRASS HINGES **L - LOCK 90°**

SMOOTH MOVEMENT



LOCK AT 90°












# BRASS HINGES
# **OVERLAY**






| CODE No. | SIZE MM | SIZE INCHES | PCS / BOX | PCS / CASE | SCREW SIZE |
|---|---|---|---|---|---|
| **EW53** | 19x19 | 3" (Half) | 5 | 60 | 6x19 |
| **EW55** | 19x19 | 4" (Half) | 5 | 60 | 6x19 |
| **EW57** | 19x25 | 3" (Half) | 5 | 60 | 6x19 |
| **EW59** | 19x25 | 4" (Half) | 5 | 60 | 6x19 |
| **EW61** | 25x25 | 3" (Half) | 5 | 60 | 6x19 |
| **EW63** | 25x25 | 4" (Half) | 5 | 60 | 6x19 |
| **EW65** | 25x19 | 3" (Half) | 5 | 60 | 6x19 |
| **EW67** | 25x19 | 4" (Half) | 5 | 60 | 6x19 |
| **EW69** | 35x25 | 3" (Half) | 5 | 60 | 6x19 |
| **EW71** | 35x25 | 4" (Half) | 5 | 60 | 6x19 |

# BRASS HINGES
# **OVERLAY**

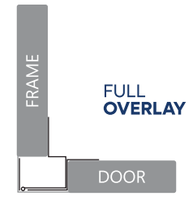




| CODE No. | SIZE MM | SIZE INCHES | PCS / BOX | PCS / CASE | SCREW SIZE |
|---|---|---|---|---|---|
| **EW54** | 19x19 | 3" (Full) | 5 | 60 | 6x19 |
| **EW56** | 19x19 | 4" (Full) | 5 | 60 | 6x19 |
| **EW58** | 19x25 | 3" (Full) | 5 | 60 | 6x19 |
| **EW60** | 19x25 | 4" (Full) | 5 | 60 | 6x19 |
| **EW62** | 25x25 | 3" (Full) | 5 | 60 | 6x19 |
| **EW64** | 25x25 | 4" (Full) | 5 | 60 | 6x19 |
| **EW66** | 25x19 | 3" (Full) | 5 | 60 | 6x19 |
| **EW68** | 25x19 | 4" (Full) | 5 | 60 | 6x19 |
| **EW70** | 35x25 | 3" (Full) | 5 | 60 | 6x19 |
| **EW72** | 35x25 | 4" (Full) | 5 | 60 | 6x19 |

SMOOTH MOVEMENT

# BRASS HINGES
# W - LOCKING

SMOOTH MOVEMENT

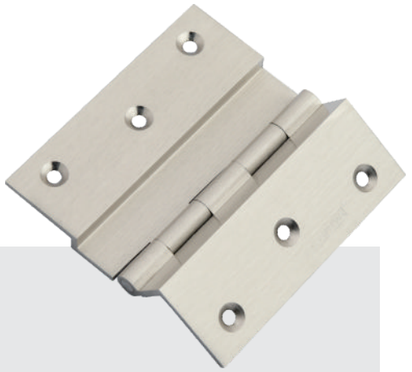

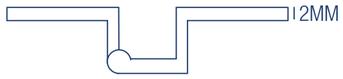


## THICKNESS 2 MM

| CODE No. | SIZE MM | SIZE INCHES | PCS / BOX | PCS / CASE | SCREW SIZE |
|---|---|---|---|---|---|
| **EW01** | 50 Regular | Regular 2" | 10 | 120 | 6x19 |
| **EW02** | 75 Regular | Regular 3" | 10 | 120 | 6x19 |
| **EW04** | 75x12x6 | 3x1/2x6mm | 10 | 120 | 6x19 |
| **EW05** | 100x12x6 | 4x1/2x6mm | 10 | 120 | 6x19 |
| **EW06** | 75x12x12 | 3x1/2x12mm | 10 | 120 | 6x19 |
| **EW07** | 100x12x12 | 4x1/2x12mm | 10 | 120 | 6x19 |
| **EW08** | 75x12x19 | 3x1/2x19mm | 10 | 120 | 6x19 |
| **EW09** | 100x12x19 | 4x1/2x19mm | 10 | 120 | 6x19 |
| **EW10** | 75x12x25 | 3x1/2x25mm | 10 | 120 | 6x19 |
| **EW11** | 100x12x25 | 4x1/2x25mm | 10 | 120 | 6x19 |
| **EW12** | 75x19x6 | 3x3/4x6mm | 10 | 120 | 6x19 |
| **EW13** | 100x19x6 | 4x3/4x6mm | 10 | 120 | 6x19 |
| **EW14** | 75x19x12 | 3x3/4x12mm | 10 | 120 | 6x19 |
| **EW15** | 100x19x12 | 4x3/4x12mm | 10 | 120 | 6x19 |
| **EW16** | 75x19x19 | 3x3/4x19mm | 10 | 120 | 6x19 |
| **EW17** | 100x19x19 | 4x3/4x19mm | 10 | 120 | 6x19 |
| **EW18** | 75x19x25 | 3x3/4x25mm | 10 | 120 | 6x19 |
| **EW19** | 100x19x25 | 4x3/4x25mm | 10 | 120 | 6x19 |
| **EW29** | 75x9x6 | 3x3/8x6mm | 10 | 120 | 6x19 |
| **EW30** | 75x9x12 | 3x3/8x12mm | 10 | 120 | 6x19 |
| **EW31** | 75x9x19 | 3x3/8x19mm | 10 | 120 | 6x19 |



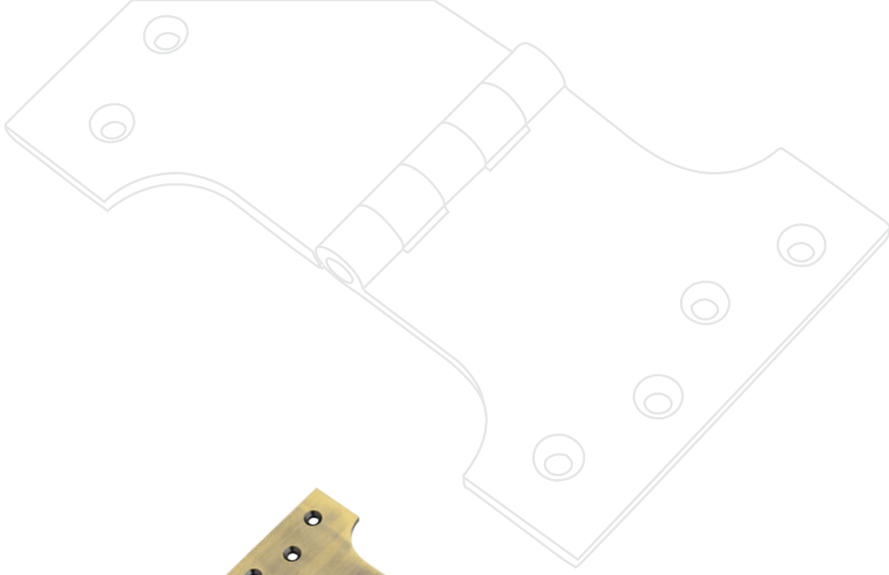

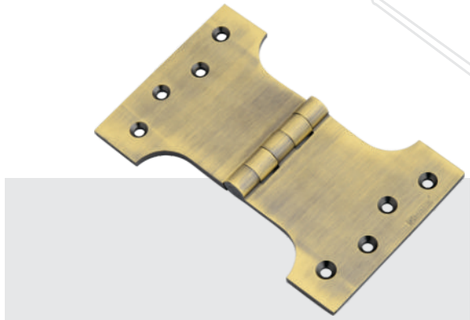

# BRASS HINGES
# PARLAMENT

| CODE No. | SIZE MM | SIZE INCHES | PCS / BOX | SCREW SIZE |
|---|---|---|---|---|
| **FP04** | 100x100 | 4x4 | 5 | 8x32 |
| **FP05** | 100x125 | 4x5 | 5 | 8x32 |
| **FP08** | 125x100 | 5x4 | 5 | 8x32 |
| **FP09** | 125x125 | 5x5 | 5 | 8x32 |
| **FP10** | 125x150 | 5x6 | 5 | 8x32 |
| **FP11** | 125x200 | 5x8 | 5 | 8x32 |
| **FP12** | 125x250 | 5x10 | 5 | 8x32 |



SINGLE ACTION



DOUBLE ACTION

# BRASS HINGES
# SPRING

| CODE No. | SIZE MM | SIZE INCHES | PCS / BOX | PCS / CASE | SCREW SIZE |
|---|---|---|---|---|---|
| **GS01** | Single Action x 100 | 4" | 5 | 80 | 8x32 |
| **GS02** | Single Action x 125 | 5" | 5 | 60 | 8x32 |
| **GS03** | Double Action x 100 | 4" | 3 | 48 | 8x32 |
| **GS04** | Double Action x 125 | 5" | 3 | 36 | 8x32 |

# Brass Towerbolt





MADHURAM®

BRINGING TO
LIFE
A TIMELESS
CREATION
THAT IS
SUFFICED
WITH
MODERNITY
AND
VERSATILITY

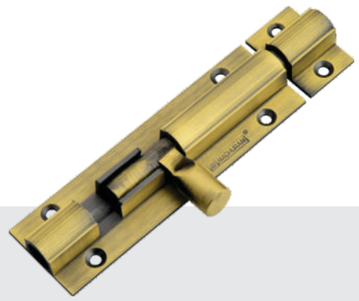

## BRASS TOWER BOLT
## 3/8 (Dia. 9.5 mm)

### ROUND

| CODE No. | SIZE MM | SIZE INCHES | PCS / BOX | PCS / CASE | SCREW SIZE |
|---|---|---|---|---|---|
| **MT01** | 9.5x75 | 3/8x3 | 10 | 120 | 4x19 |
| **MT02** | 9.5x100 | 3/8x4 | 5 | 100 | 4x19 |
| **MT03** | 9.5x150 | 3/8x6 | 5 | 60 | 4x19 |
| **MT04** | 9.5x200 | 3/8x8 | 5 | 50 | 4x19 |
| **MT05** | 9.5x250 | 3/8x10 | 5 | 30 | 4x19 |
| **MT06** | 9.5x300 | 3/8x12 | 5 | 30 | 4x19 |



### HEX

| CODE No. | SIZE MM | SIZE INCHES | PCS / BOX | PCS / CASE | SCREW SIZE |
|---|---|---|---|---|---|
| **MT08** | 9.5x75 | 3/8x3 | 10 | 120 | 4x19 |
| **MT09** | 9.5x100 | 3/8x4 | 5 | 100 | 4x19 |
| **MT10** | 9.5x150 | 3/8x6 | 5 | 60 | 4x19 |
| **MT11** | 9.5x200 | 3/8x8 | 5 | 50 | 4x19 |
| **MT12** | 9.5x250 | 3/8x10 | 5 | 30 | 4x19 |
| **MT13** | 9.5x300 | 3/8x12 | 5 | 30 | 4x19 |



### BULLET

| CODE No. | SIZE MM | SIZE INCHES | PCS / BOX | PCS / CASE | SCREW SIZE |
|---|---|---|---|---|---|
| **MT17** | 9.5x100 | 3/8x4 | 5 | 100 | 4x19 |
| **MT18** | 9.5x150 | 3/8x6 | 5 | 60 | 4x19 |
| **MT19** | 9.5x200 | 3/8x8 | 5 | 50 | 4x19 |
| **MT20** | 9.5x250 | 3/8x10 | 5 | 30 | 4x19 |
| **MT21** | 9.5x300 | 3/8x12 | 5 | 30 | 4x19 |
| **MT22** | 9.5x375 | 3/8x15 | 3 | 36 | 4x19 |
| **MT23** | 9.5x450 | 3/8x18 | 3 | 36 | 4x19 |








### MATAKA

| CODE No. | SIZE MM | SIZE INCHES | PCS / BOX | PCS / CASE | SCREW SIZE |
|---|---|---|---|---|---|
| **NT1** | 10x100 | 4 | 5 | 100 | 4x19 |
| **NT2** | 10x150 | 6 | 5 | 60 | 4x19 |
| **NT3** | 10x200 | 8 | 5 | 50 | 4x19 |
| **NT4** | 10x250 | 10 | 5 | 30 | 4x19 |
| **NT5** | 10x300 | 12 | 5 | 30 | 4x19 |
| **NT6** | 10x375 | 15 | 3 | 36 | 4x19 |
| **NT7** | 10x450 | 18 | 3 | 36 | 4x19 |
| **NT8** | 10x600 | 24 | 3 | 36 | 4x19 |
| **NT9** | 10x750 | 30 | 3 | 24 | 4x19 |
| **NT11** | 10x900 | 36 | 3 | 15 | 4x19 |
| **NT12** | 10x1200 | 48 | 3 | 15 | 4x19 |

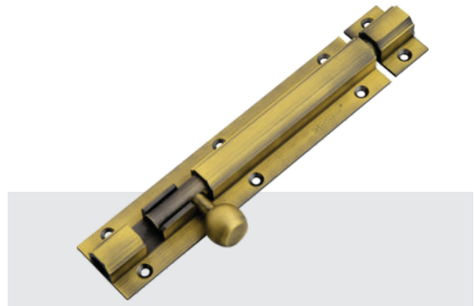

### BULLET

| CODE No. | SIZE MM | SIZE INCHES | PCS / BOX | PCS / CASE | SCREW SIZE |
|---|---|---|---|---|---|
| **NTB1** | 10x100 | 4 | 5 | 100 | 4x19 |
| **NTB2** | 10x150 | 6 | 5 | 60 | 4x19 |
| **NTB3** | 10x200 | 8 | 5 | 50 | 4x19 |
| **NTB4** | 10x250 | 10 | 5 | 30 | 4x19 |
| **NTB5** | 10x300 | 12 | 5 | 30 | 4x19 |
| **NTB6** | 10x375 | 15 | 3 | 36 | 4x19 |
| **NTB7** | 10x450 | 18 | 3 | 36 | 4x19 |
| **NTB8** | 10x600 | 24 | 3 | 36 | 4x19 |






## CEMEX

| CODE No. | SIZE MM | SIZE INCHES | PCS / BOX | PCS / CASE | SCREW SIZE |
|---|---|---|---|---|---|
| **ST192** | 10x100 | 4 | 5 | 100 | 4x19 |
| **ST193** | 10x150 | 6 | 5 | 60 | 4x19 |
| **ST194** | 10x200 | 8 | 5 | 50 | 4x19 |
| **ST195** | 10x250 | 10 | 5 | 30 | 4x19 |
| **ST196** | 10x300 | 12 | 5 | 30 | 4x19 |
| **ST206** | 10x375 | 15 | 3 | 36 | 4x19 |
| **ST197** | 10x450 | 18 | 3 | 36 | 4x19 |
| **ST198** | 10x600 | 24 | 3 | 36 | 4x19 |
| **ST199** | 10x750 | 30 | 3 | 24 | 4x19 |
| **ST200** | 10x900 | 36 | 3 | 15 | 4x19 |



## SQUARE

| CODE No. | SIZE MM | SIZE INCHES | PCS / BOX | PCS / CASE | SCREW SIZE |
|---|---|---|---|---|---|
| **ST127** | 10x100 | 4 | 5 | 100 | 4x19 |
| **ST128** | 10x150 | 6 | 5 | 60 | 4x19 |
| **ST129** | 10x200 | 8 | 5 | 50 | 4x19 |
| **ST130** | 10x250 | 10 | 5 | 30 | 4x19 |
| **ST131** | 10x300 | 12 | 5 | 30 | 4x19 |
| **ST132** | 10x375 | 15 | 3 | 36 | 4x19 |
| **ST133** | 10x450 | 18 | 3 | 36 | 4x19 |
| **ST134** | 10x600 | 24 | 3 | 36 | 4x19 |






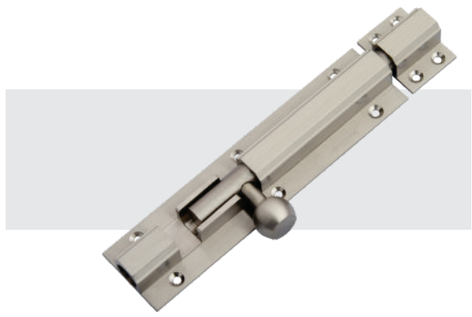

## BULLET

| CODE No. | SIZE MM | SIZE INCHES | PCS / BOX | PCS / CASE | SCREW SIZE |
|---|---|---|---|---|---|
| **OT11** | 12x100 | 4 | 5 | 100 | 4x19 |
| **OT12** | 12x150 | 6 | 5 | 60 | 4x19 |
| **OT13** | 12x200 | 8 | 5 | 50 | 4x19 |
| **OT14** | 12x250 | 10 | 5 | 30 | 4x19 |
| **OT15** | 12x300 | 12 | 5 | 30 | 4x19 |
| **OT16** | 12x375 | 15 | 3 | 36 | 4x19 |
| **OT17** | 12x450 | 18 | 3 | 36 | 4x19 |
| **OT18** | 12x600 | 24 | 3 | 36 | 4x19 |
| **OT19** | 12x750 | 30 | 3 | 24 | 4x19 |
| **OT20** | 12x900 | 36 | 3 | 24 | 4x19 |
| **OT21** | 12x1050 | 42 | 3 | 12 | 4x19 |
| **OT22** | 12x1200 | 48 | 1 | 12 | 4x19 |
| **OT23** | 12x1500 | 60 | 1 | 6 | 4x19 |
| **OT24** | 12x1800 | 72 | 1 | 6 | 4x19 |

# BRASS TOWER BOLT
## 1/2 (Dia. 12 mm)

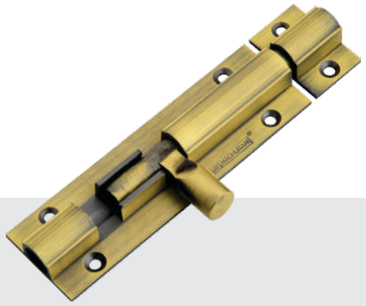

### ROUND

| CODE No. | SIZE MM | SIZE INCHES | PCS / BOX | PCS / CASE | SCREW SIZE |
|---|---|---|---|---|---|
| **OT1** | 12x100 | 1/2x4 | 5 | 100 | 4x19 |
| **OT2** | 12x150 | 1/2x6 | 5 | 60 | 4x19 |
| **OT3** | 12x200 | 1/2x8 | 5 | 50 | 4x19 |
| **OT4** | 12x250 | 1/2x10 | 5 | 30 | 4x19 |
| **OT5** | 12x300 | 1/2x12 | 5 | 30 | 4x19 |
| **OT6** | 12x375 | 1/2x15 | 3 | 36 | 4x19 |
| **OT7** | 12x450 | 1/2x18 | 3 | 36 | 4x19 |
| **OT8** | 12x600 | 1/2x24 | 3 | 36 | 4x19 |
| **OT9** | 12x750 | 1/2x30 | 3 | 24 | 4x19 |

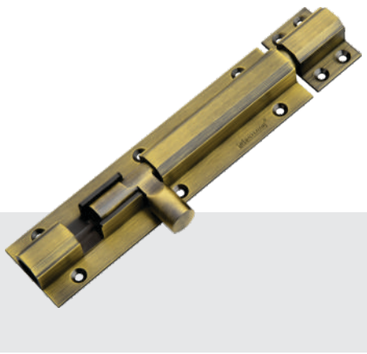

### HEX

| CODE No. | SIZE MM | SIZE INCHES | PCS / BOX | PCS / CASE | SCREW SIZE |
|---|---|---|---|---|---|
| **OTH1** | 12x100 | 4 | 5 | 100 | 4x19 |
| **OTH2** | 12x150 | 6 | 5 | 60 | 4x19 |
| **OTH3** | 12x200 | 8 | 5 | 50 | 4x19 |
| **OTH4** | 12x250 | 10 | 5 | 30 | 4x19 |
| **OTH5** | 12x300 | 12 | 5 | 30 | 4x19 |
| **OTH6** | 12x375 | 15 | 3 | 36 | 4x19 |
| **OTH7** | 12x450 | 18 | 3 | 36 | 4x19 |
| **OTH8** | 12x600 | 24 | 3 | 36 | 4x19 |
| **OTH9** | 12x750 | 30 | 3 | 24 | 4x19 |
| **OTH11** | 12x900 | 36 | 3 | 15 | 4x19 |
| **OTH12** | 12x1200 | 48 | 1 | 12 | 4x19 |

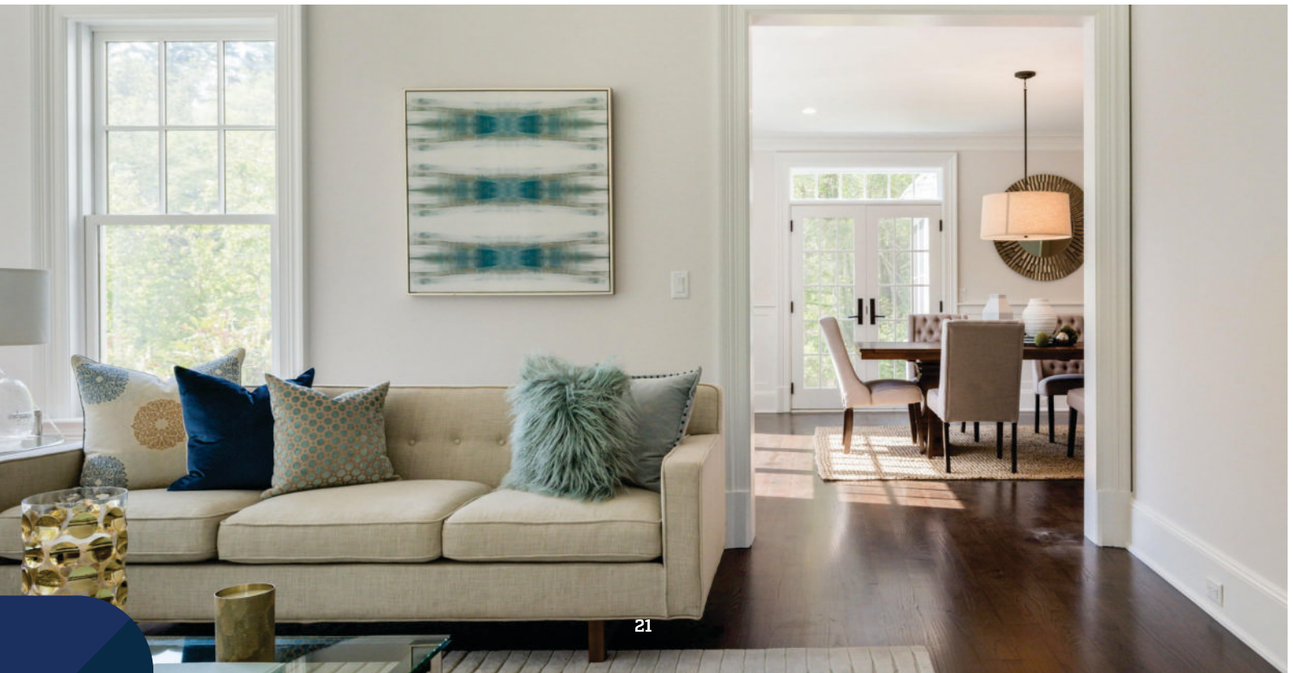



# BRASS TOWER BOLT
## 5/8 (Dia. 15 mm)




### ROUND

| CODE No. | SIZE MM | SIZE INCHES | PCS / BOX | SCREW SIZE |
|---|---|---|---|---|
| **PT01** | 15x100 | 4 | 2 | 8x32 |
| **PT02** | 15x150 | 6 | 2 | 8x32 |
| **PT03** | 15x200 | 8 | 2 | 8x32 |
| **PT04** | 15x250 | 10 | 2 | 8x32 |
| **PT05** | 15x300 | 12 | 2 | 8x32 |
| **PT06** | 15x375 | 15 | 1 | 8x32 |
| **PT07** | 15x450 | 18 | 1 | 8x32 |
| **PT08** | 15x600 | 24 | 1 | 8x32 |
| **PT09** | 15x750 | 30 | 1 | 8x32 |
| **PT10** | 15x900 | 36 | 1 | 8x32 |
| **PT11** | 15x1050 | 42 | 1 | 8x32 |
| **PT12** | 15x1200 | 48 | 1 | 8x32 |
| **PT13** | 15x1500 | 60 | 1 | 8x32 |
| **PT14** | 15x1800 | 72 | 1 | 8x32 |

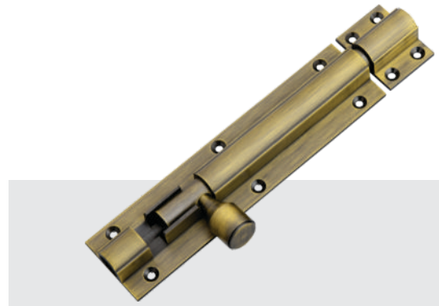

## BRASS TOWER BOLT
## **CRUZ**

| CODE No. | SIZE MM | SIZE INCHES | PCS / BOX | PCS / CASE | SCREW SIZE |
|---|---|---|---|---|---|
| **ST48** | 100 | 4 | 5 | 100 | 4x19 |
| **ST49** | 150 | 6 | 5 | 60 | 4x19 |
| **ST50** | 200 | 8 | 5 | 50 | 4x19 |
| **ST51** | 250 | 10 | 5 | 30 | 4x19 |
| **ST52** | 300 | 12 | 5 | 30 | 4x19 |
| **ST54** | 450 | 18 | 3 | 24 | 4x19 |



## BRASS TOWER BOLT
## **MEXICO NX**

| CODE No. | SIZE MM | SIZE INCHES | PCS / BOX | PCS / CASE | SCREW SIZE |
|---|---|---|---|---|---|
| **ST64** | 75 | 3 | 10 | 120 | 4x19 |
| **ST65** | 100 | 4 | 5 | 100 | 4x19 |
| **ST66** | 150 | 6 | 5 | 60 | 4x19 |
| **ST67** | 200 | 8 | 5 | 50 | 4x19 |
| **ST68** | 250 | 10 | 5 | 30 | 4x19 |
| **ST69** | 300 | 12 | 5 | 30 | 4x19 |



## BRASS TOWER BOLT
## **TAPPER NX 8 mm**

| CODE No. | SIZE MM | SIZE INCHES | PCS / BOX | PCS / CASE | SCREW SIZE |
|---|---|---|---|---|---|
| **ST77** | 75 | 3 | 10 | 120 | 4x19 |
| **ST78** | 100 | 4 | 5 | 100 | 4x19 |
| **ST79** | 150 | 6 | 5 | 60 | 4x19 |
| **ST80** | 200 | 8 | 5 | 50 | 4x19 |
| **ST81** | 250 | 10 | 5 | 30 | 4x19 |
| **ST82** | 300 | 12 | 5 | 30 | 4x19 |
| **ST148** | 375 | 15 | 3 | 36 | 4x19 |
| **ST149** | 450 | 18 | 3 | 36 | 4x19 |





## BRASS TOWER BOLT
## **TAPPER 9.5 mm**




| CODE No. | SIZE MM | SIZE INCHES | PCS / BOX | PCS / CASE | SCREW SIZE |
|---|---|---|---|---|---|
| **ST83** | 100 | 4 | 5 | 100 | 4x19 |
| **ST84** | 150 | 6 | 5 | 60 | 4x19 |
| **ST85** | 200 | 8 | 5 | 50 | 4x19 |
| **ST86** | 250 | 10 | 5 | 30 | 4x19 |
| **ST87** | 300 | 12 | 5 | 30 | 4x19 |
| **ST88** | 375 | 15 | 3 | 36 | 4x19 |
| **ST89** | 450 | 18 | 3 | 36 | 4x19 |
| **ST90** | 600 | 24 | 3 | 36 | 4x19 |
| **ST126** | 750 | 30 | 3 | 36 | 4x19 |
| **ST151** | 900 | 36 | 3 | 24 | 4x19 |
| **ST205** | 1050 | 42 | 3 | 18 | 4x19 |
| **ST115** | 1200 | 48 | 1 | 15 | 4x19 |




| CODE No. | SIZE MM | SIZE INCHES | PCS / BOX | PCS / CASE | SCREW SIZE |
|---|---|---|---|---|---|
| **ST108** | 150 | 6 | 3 | | 8x32 |
| **ST104** | 200 | 8 | 3 | | 8x32 |
| **ST107** | 250 | 10 | 3 | | 8x32 |
| **ST105** | 300 | 12 | 3 | | 8x32 |
| **ST110** | 450 | 18 | 1 | | 8x32 |
| **ST111** | 600 | 24 | 1 | | 8x32 |
| **ST112** | 750 | 30 | 1 | | 8x32 |
| **ST113** | 900 | 36 | 1 | | 8x32 |
| **ST161** | 1050 | 42 | 1 | | 8x32 |
| **ST114** | 1200 | 48 | 1 | | 8x32 |

## BRASS TOWER BOLT **TAPPER 12 mm**





| CODE No. | SIZE MM | SIZE INCHES | PCS / BOX | PCS / CASE | SCREW SIZE |
|---|---|---|---|---|---|
| **ST117** | 100 | 4 | 5 | 100 | 4x19 |
| **ST118** | 150 | 6 | 5 | 60 | 4x19 |
| **ST119** | 200 | 8 | 5 | 50 | 4x19 |
| **ST120** | 250 | 10 | 5 | 30 | 4x19 |
| **ST121** | 300 | 12 | 5 | 30 | 4x19 |
| **ST122** | 375 | 15 | 3 | 36 | 4x19 |
| **ST123** | 450 | 18 | 3 | 36 | 4x19 |
| **ST124** | 600 | 24 | 3 | 36 | 4x19 |
| **ST202** | 750 | 30 | 3 | 24 | 4x19 |
| **ST162** | 900 | 36 | 3 | 18 | 4x19 |

## BRASS TOWER BOLT **TAPPER NECK**

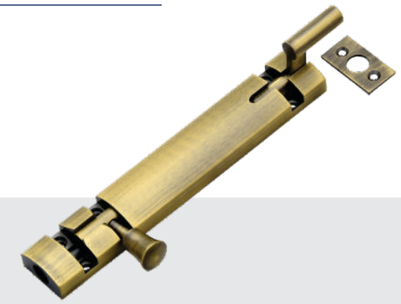

| CODE No. | SIZE MM | SIZE INCHES | PCS / BOX | PCS / CASE | SCREW SIZE |
|---|---|---|---|---|---|
| **ST17** | 100 | 4 | 5 | 100 | 4X19 |
| **ST18** | 150 | 6 | 5 | 60 | 4X19 |
| **ST19** | 200 | 8 | 5 | 50 | 4X19 |
| **ST20** | 250 | 10 | 5 | 30 | 4X19 |
| **ST21** | 300 | 12 | 5 | 30 | 4X19 |
| **ST23** | 450 | 18 | 3 | 36 | 4X19 |

## BRASS TOWER BOLT **ROYAL**



| CODE No. | SIZE MM | SIZE INCHES | PCS / BOX | PCS / CASE | SCREW SIZE |
|---|---|---|---|---|---|
| **ST25** | 100 | 4 | 5 | 100 | 4X19 |
| **ST26** | 150 | 6 | 5 | 60 | 4X19 |
| **ST27** | 200 | 8 | 5 | 50 | 4X19 |
| **ST28** | 250 | 10 | 5 | 30 | 4X19 |
| **ST29** | 300 | 12 | 5 | 30 | 4X19 |
| **ST30** | 375 | 15 | 3 | 36 | 4X19 |
| **ST31** | 450 | 18 | 3 | 36 | 4X19 |
| **ST32** | 600 | 24 | 3 | 36 | 4X19 |
| **ST33** | 750 | 30 | 3 | 36 | 4X19 |
| **ST34** | 900 | 36 | 3 | 24 | 4X19 |

## BRASS TOWER BOLT **FLUSH**

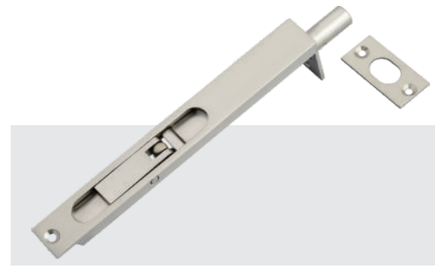

BUILD TO PERFECTION, IT IS COMPRISED OF EXEMPLARY FINISH AND STRENGTH.





## BRASS TOWER BOLT **NECK**

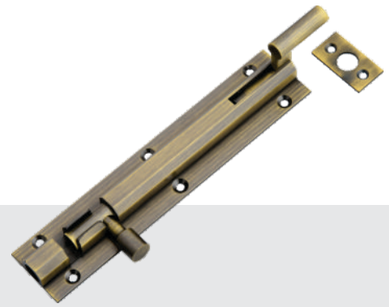

| CODE No. | SIZE MM | SIZE INCHES | PCS / BOX | PCS / CASE | SCREW SIZE |
|---|---|---|---|---|---|
| **ST125** | 62 | 2.5 | 10 | 120 | 4x19 |
| **ST91** | 75 | 3 | 10 | 120 | 4x19 |
| **ST92** | 100 | 4 | 5 | 100 | 4x19 |
| **ST101** | 125 | 5 | 5 | 60 | 4x19 |
| **ST93** | 150 | 6 | 5 | 50 | 4x19 |
| **ST94** | 200 | 8 | 5 | 30 | 4x19 |
| **ST95** | 250 | 10 | 5 | 30 | 4x19 |
| **ST96** | 300 | 12 | 3 | 36 | 4x19 |
| **ST97** | 375 | 15 | 3 | 36 | 4x19 |
| **ST98** | 450 | 18 | 3 | 36 | 4x19 |
| **ST99** | 600 | 24 | 3 | 36 | 4x19 |
| **ST138** | 750 | 30 | 3 | 24 | 4x19 |
| **ST152** | 900 | 36 | 3 | 18 | 4x19 |
| **ST169** | 1050 | 42 | 3 | 15 | 4x19 |

## BRASS TOWER BOLT **SUPER NACK**

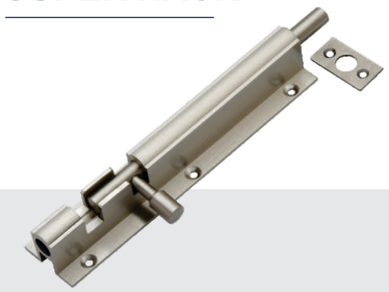

| CODE No. | SIZE MM | SIZE INCHES | PCS / BOX | PCS / CASE | SCREW SIZE |
|---|---|---|---|---|---|
| **ST139** | 75 | 3 | 10 | 120 | 4x19 |
| **ST140** | 100 | 4 | 5 | 100 | 4x19 |
| **ST141** | 150 | 6 | 5 | 60 | 4x19 |
| **ST142** | 200 | 8 | 5 | 50 | 4x19 |
| **ST143** | 250 | 10 | 5 | 30 | 4x19 |
| **ST144** | 300 | 12 | 5 | 30 | 4x19 |
| **ST145** | 375 | 15 | 3 | 36 | 4x19 |
| **ST146** | 450 | 18 | 3 | 36 | 4x19 |
| **ST147** | 600 | 24 | 3 | 36 | 4x19 |
| **ST204** | 750 | 30 | 3 | 24 | 4x19 |
| **ST168** | 900 | 36 | 3 | 18 | 4x19 |





# BRASS
# CAM BOLT

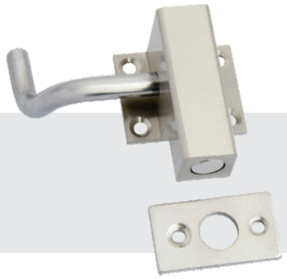

| CODE No. | SIZE MM | SIZE INCHES | PAIR / BOX | PAIR / CASE | SCREW SIZE |
|---|---|---|---|---|---|
| **ST100** | SMALL 40mm | SMALL 40mm | 5 | 105 | 4x19 |





# BRASS
# BABY LATCH

## SQUARE

| CODE No. | SIZE MM | SIZE INCHES | PCS / BOX | PCS / CASE | SCREW SIZE |
|---|---|---|---|---|---|
| **TB01** | 75 | 3 | 5 | 60 | 4x19 |

## ZEN

| CODE No. | SIZE MM | SIZE INCHES | PCS / BOX | PCS / CASE | SCREW SIZE |
|---|---|---|---|---|---|
| **TB03** | 75 | 3 | 10 | 120 | 4x19 |
| **TB04** | 100 | 4 | 5 | 100 | 4x19 |

## SQUARE NX

| CODE No. | SIZE MM | SIZE INCHES | PCS / BOX | PCS / CASE | SCREW SIZE |
|---|---|---|---|---|---|
| **TB08** | 75 | 3 | 10 | 120 | 4x19 |
| **TB09** | 100 | 4 | 5 | 100 | 4x19 |







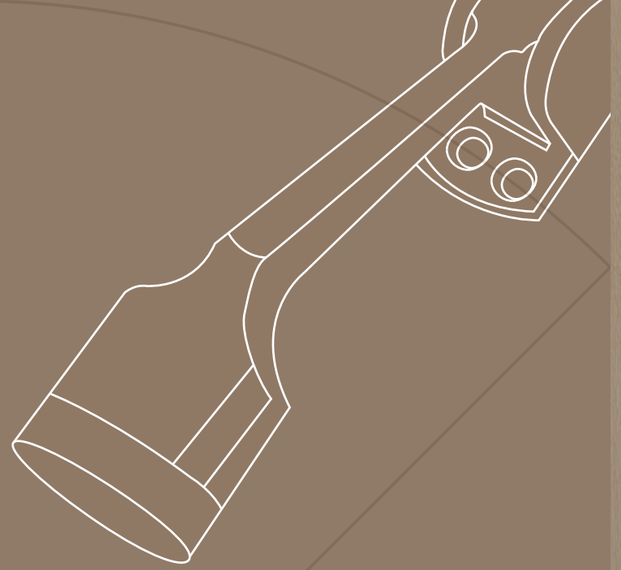

# Brass Fitting

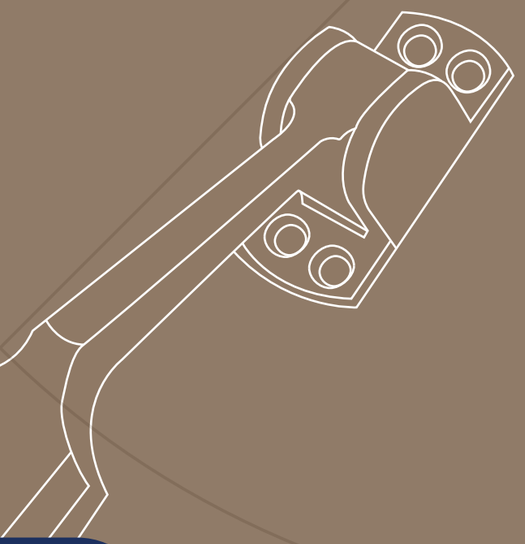



MADHURAM®

SUITABLE

STIFF

STYLISH

SUSTAINABLE





# BRASS
# DOOR STOPPER

## FLOOR MOUNT

| CODE No. | ITEM TYPE | PCS / BOX | PCS / CASE | SCREW SIZE |
|---|---|---|---|---|
| **DSM1** | Mango | 5 | 60 | 6x19 |

## BRASS DOOR MAGNET (ROUND)

| CODE No. | SIZE MM | SIZE INCHES | PCS / BOX | PCS / CASE |
|---|---|---|---|---|
| **MDC11** | 75 | 3 | 2 | 60 |
| **MDC8** | 100 | 4 | 2 | 60 |





# BRASS
# DOOR STOPPER

## MEXICO

| CODE No. | ITEM TYPE | SIZE INCHES | PCS / BOX | PCS / CASE | SCREW SIZE |
|---|---|---|---|---|---|
| **UD03** | Mexico | 5 | 5 | 60 | 6x19 |



## BRASS DOOR CATCHER (CONCEAL)

| CODE No. | SIZE MM | SIZE INCHES | PCS / BOX | PCS / CASE |
|---|---|---|---|---|
| **DC2** | 75 | 3 | 2 | 60 |
| **DC3** | 100 | 4 | 2 | 60 |



## BRASS
## DOOR CHAIN

| CODE No. | SIZE MM | SIZE INCHES | PCS / BOX | SCREW SIZE |
|---|---|---|---|---|
| **UC01** | 200 | 8 | 5 | 6x19 |

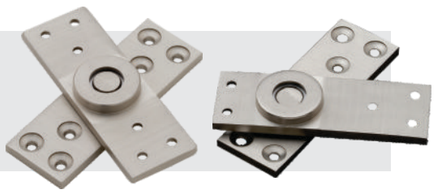

## BRASS
## BEARING PIVOT

| CODE No. | SIZE MM | SIZE INCHES | PCS / BOX | PCS / CASE | SCREW SIZE |
|---|---|---|---|---|---|
| **UB01** | 100 | 4X1.1/4 (CENTRE) | 5 | 60 | 6x19 |
| **UB04** | 150 | 6X1.1/4 (CENTRE) | 5 | 60 | 6x19 |
| **UB06** | 100 | 4X1.1/4 (SIDE) | 5 | 60 | 6x19 |
| **UB07** | 150 | 6X1.1/4 (SIDE) | 5 | 60 | 6x19 |



## BRASS
## WINDOW STAY

### "ADJUSTABLE"

| CODE No. | SIZE MM | SIZE INCHES | PCS / BOX | PCS / CASE | SCREW SIZE |
|---|---|---|---|---|---|
| **UW01** | Regular x 150 | 6 | 10 | 120 | 6x19 |

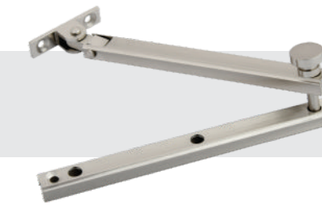

### "DELUX"

| CODE No. | SIZE MM | SIZE INCHES | PCS / BOX | PCS / CASE | SCREW SIZE |
|---|---|---|---|---|---|
| **UW02** | 150 | 6 | 10 | 120 | 6x19 |



### "SOLID"

| CODE No. | SIZE MM | SIZE INCHES | PCS / BOX | PCS / CASE | SCREW SIZE |
|---|---|---|---|---|---|
| **UW03** | 150 | 6 | 10 | 120 | 6x19 |
| **UW04** | 200 | 8 | 10 | 120 | 6x19 |





## BRASS
## OVEL SOCKET

(Per Pair)

| CODE No. | SIZE MM | SIZE INCHES | PCS / BOX | SCREW SIZE |
|---|---|---|---|---|
| **UPC04** | 15 | 5/8 HEAVY | 40 | 6x19 |
| **UPC05** | 19 | 3/4 REGULAR | 40 | 6x19 |
| **UPC06** | 25 | 1 REGULAR | 40 | 6x19 |



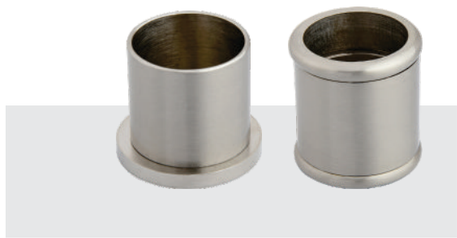

PLAIN THREE PCS

## BRASS
## CONCEAL

(Per Pair)

| CODE No. | ITEM TYPE | SIZE INCHES | PCS / BOX | SCREW SIZE |
|---|---|---|---|---|
| **UPC01** | PLAIN | 3/4x1 | 40 | 6x19 |
| **UPC02** | PLAIN | 1x1 | 40 | 6x19 |
| **UPC03** | THREE PCS | 1x1.1/2 | 40 | 6x19 |



# BRASS
# GATE HOOK



## HEAVY

| CODE No. | SIZE MM | SIZE INCHES | PCS / BOX | PCS / CASE | SCREW SIZE |
|---|---|---|---|---|---|
| **UG16** | 50 | 2 | 20 | 240 | 4x19 |
| **UG01** | 62 | 2.1/2 | 20 | 240 | 4x19 |
| **UG02** | 75 | 3 | 20 | 240 | 4x19 |
| **UG03** | 100 | 4 | 20 | 240 | 4x19 |
| **UG04** | 125 | 5 | 10 | 200 | 4x19 |
| **UG05** | 150 | 6 | 10 | 200 | 4x19 |



## FANCY

| CODE No. | SIZE MM | SIZE INCHES | PCS / BOX | PCS / CASE | SCREW SIZE |
|---|---|---|---|---|---|
| **UG18** | 62 | 2.1/2 | 20 | 240 | 4x19 |
| **UG06** | 100 | 4 | 20 | 240 | 4x19 |
| **UG07** | 125 | 5 | 10 | 200 | 4x19 |
| **UG08** | 150 | 6 | 10 | 200 | 4x19 |
| **UG09** | 200 | 8 | 10 | 200 | 4x19 |



# BRASS
# PUSH MAGNET

| CODE No. | ITEM TYPE | PCS / BOX | PCS / CASE | SCREW SIZE |
|---|---|---|---|---|
| **UP01** | T.Bolt Type | 20 | 240 | 4x19 |
| **UP02** | Flower Type | 20 | 240 | 4x19 |

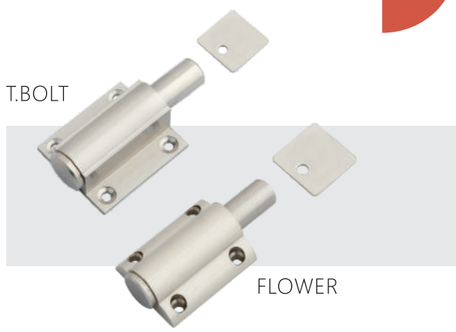


# BRASS
# DOOR EYE

| CODE No. | SIZE MM | SIZE INCHES | PCS / BOX | PCS / CASE |
|---|---|---|---|---|
| **UE01** | 50 | 2 (Round) | 12 | 144 |
| **UE02** | 75 | 3 (Round) | 12 | 144 |
| **UE03** | 50 | 2 (Square) | 12 | 144 |





# BRASS
# ALDROPS

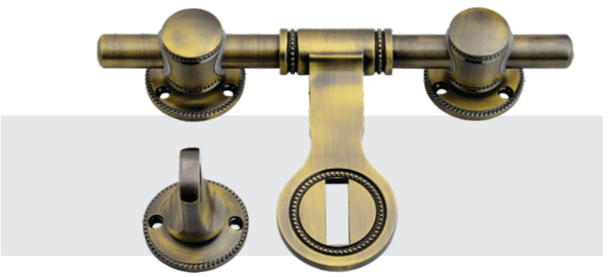

## JORJAN

| CODE No. | SIZE MM | SIZE INCHES |
|---|---|---|
| **VA01** | 16x200 (2+1) | 5/8x8 |
| **VA02** | 16x250 (2+1) | 5/8x10 |
| **VA03** | 16x300 (3+1) | 5/8x12 |
| **VA04** | 16x350 (3+1) | 5/8x14 |
| **VA07** | 19x250 (2+1) | 3/4x10 |
| **VA08** | 19x300 (3+1) | 3/4x12 |
| **VA09** | 19x350 (3+1) | 3/4x14 |
| **VA10** | 19x400 (3+1) | 3/4x16 |
| **VA11** | 19x450 (3+1) | 3/4x18 |
| **VA17** | 25x400 (3+1) | 1x16 |
| **VA18** | 25x450 (3+1) | 1x18 |
| **VA19** | 25x500 (3+1) | 1x20 |
| **VA20** | 25x550 (3+1) | 1x22 |
| **VA21** | 25x600 (3+1) | 1x24 |
| **VA28** | - | 5/8 Extra Clip |
| **VA29** | - | 5/8 Extra Lock |
| **VA30** | - | 3/4 Extra Clip |
| **VA31** | - | 3/4 Extra Lock |
| **VA32** | - | 1 Extra Clip |
| **VA33** | - | 1 Extra Lock |

## PLUS

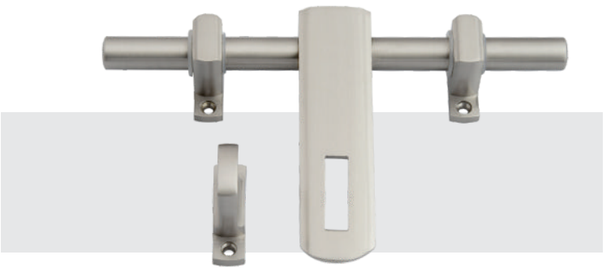

| CODE No. | SIZE MM | SIZE INCHES |
|---|---|---|
| **VA34** | 12x150 (2+1) | 1/2x6 |
| **VA35** | 12x200 (2+1) | 1/2x8 |
| **VA36** | 16x200 (2+1) | 5/8x8 |
| **VA37** | 16x250 (2+1) | 5/8x10 |
| **VA38** | 16x300 (3+1) | 5/8x12 |
| **VA63** | - | 1/2 Extra Clip |
| **VA64** | - | 1/2 Extra Lock |
| **VA42** | - | 5/8 Extra Clip |
| **VA43** | - | 5/8 Extra Lock |

# BRASS
# TADI

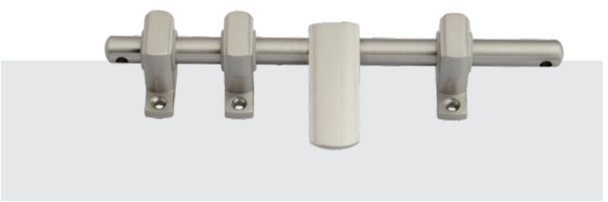

| CODE No. | SIZE MM | SIZE INCHES |
|---|---|---|
| **VL01** | 12x200 | 1/2x8 |
| **VL02** | 12x250 | 1/2x10 |
| **VL03** | 12x300 | 1/2x12 |



# BRASS
# DOOMS

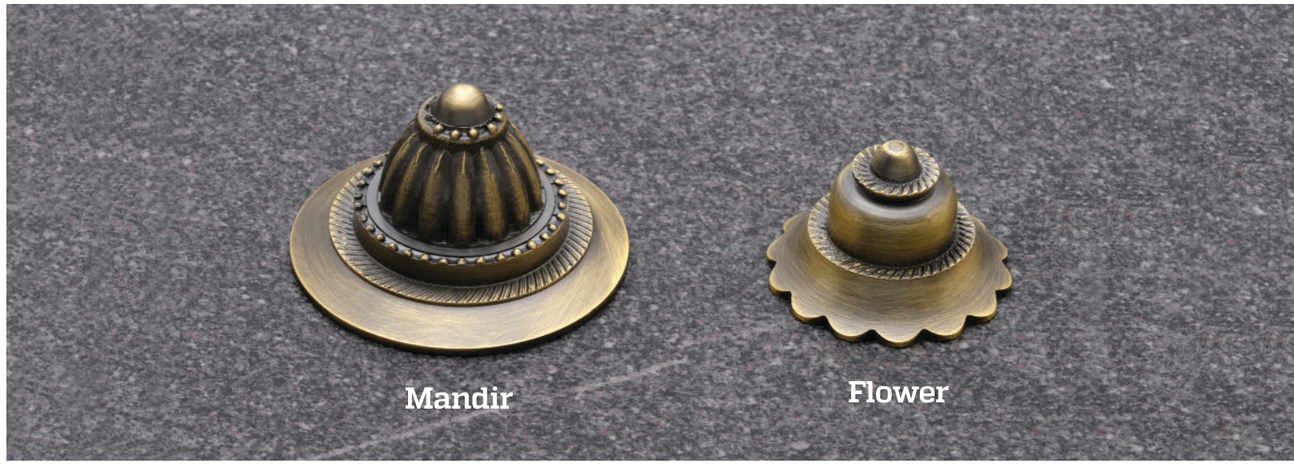


## MANDIR

| CODE No. | SIZE MM | SIZE INCHES |
|---|---|---|
| **DM01** | 38 | 1.1/2 |
| **DM02** | 50 | 2 |
| **DM03** | 63 | 2.1/2 |
| **DM04** | 75 | 3 |

## FLOWER

| CODE No. | SIZE MM | SIZE INCHES |
|---|---|---|
| **DF01** | 25 | 1 |
| **DF02** | 31 | 1.1/4 |
| **DF03** | 38 | 1.1/2 |
| **DF04** | 50 | 2 |
| **DF05** | 63 | 2.1/2 |
| **DF06** | 75 | 3 |



# BRASS
# TAKORI

| CODE No. | SIZE MM | SIZE INCHES |
|---|---|---|
| **TKR01** | 38 | 1.1/2" |
| **TKR02** | 50 | 2" |

# BRASS
# JULA FITTINGS



BEARING CEILING KADA



BOTTOM KADA



S HOOK



PLATE
BEARING KADA



JULA CHAIN
JORJAN



JULA CHAIN
RAJWADI

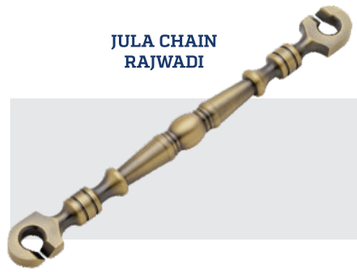

| CODE No. | ITEM |
|---|---|
| VJ01 | Bearing Ceiling Kada Set (2 Pcs) |
| VJ05 | Plate Bearing Kada Set (2 Pcs) |
| VJ02 | Bottam Kada set (4 PCS) |
| VJ03 | S Hook (1 Pcs) |
| VJ04 | Jula Chain 'jorjan' (3") |
| VJ06 | Jula Chain 'Rajwadi' (12") |



BRASS
JULA FITTINGS




| CODE No. | ITEM |
|---|---|
| VJ07 | Jula Chain 'PUPPET' (12") |
| VJ08 | Jula Chain 'LION' (8") |
| VJ09 | Jula Chain 'ELEPHANT' (8") |
| VJ10 | Jula Chain 'PEACOCK' (8") |
| VJ11 | Jula Chain 'PERROT' (8") |
| VJ12 | Jula Chain 'HORSE' (8") |



## BRASS
## PANEL LOCK

(HEAVY WITH KEY )

| CODE No. | SIZE MM | SIZE INCHES |
|---|---|---|
| **AKL01** | 19 | 3/4″ |
| **AKL02** | 25 | 1″ |
| **AKL03** | 35 | 1.1/2″ |
| **AKL04** | 50 | 2″ |
| **AKL** | | EXTRA ALENKEY |



## BRASS
## DUST PROOF

| CODE No. | SIZE MM |
|---|---|
| **DP2** | 10 |
| **DP3** | 12 |



## BRASS
## KEY HOLE SQUARE

| CODE No. | ITEM | TYPE |
|---|---|---|
| **RA11** | CY KEY HOLE | SQUARE |
| **RA43** | KY KEY HOLE | SQUARE |



## BRASS
## KEY HOLE TAPPER

| CODE No. | ITEM | TYPE |
|---|---|---|
| **RA42** | CY KEY HOLE | TAPPER |
| **RA45** | KY KEY HOLE | TAPPAR |

BRASS
# KHUTI



## CUBE

| CODE No. | SIZE IN POINT |
|---|---|
| VK50 | 2 |
| VK51 | 3 |
| VK52 | 4 |
| VK53 | 5 |
| VK54 | 6 |



## OVEL

| CODE No. | SIZE IN POINT |
|---|---|
| VK36 | 2 |
| VK37 | 3 |
| VK38 | 4 |
| VK39 | 5 |
| VK40 | 6 |



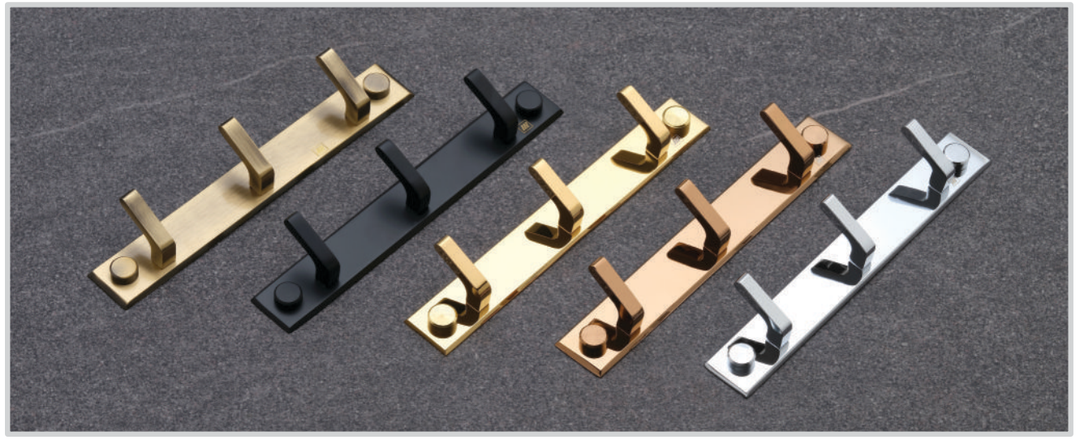

## VOLVO

| CODE No. | SIZE IN POINT |
|---|---|
| VK22 | 2 |
| VK23 | 3 |
| VK24 | 4 |
| VK25 | 5 |
| VK26 | 6 |

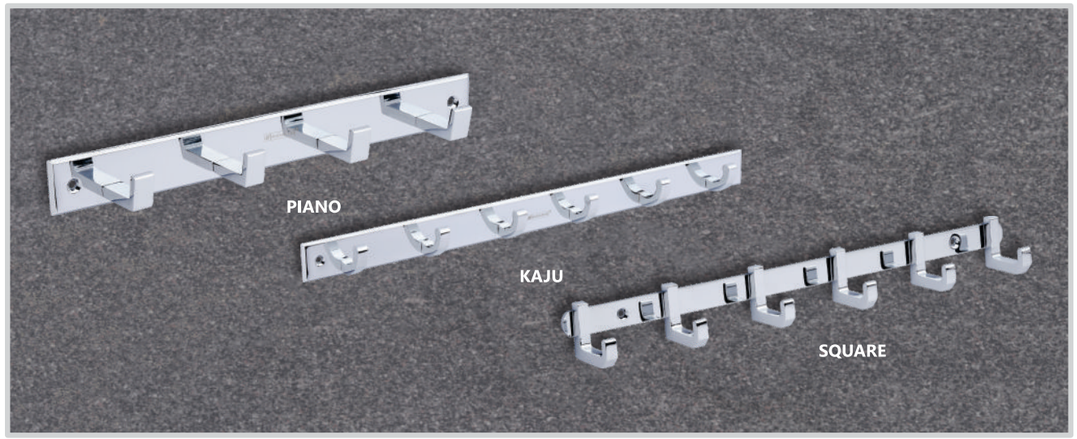


## PIANO

| CODE No. | SIZE IN POINT |
|---|---|
| VK15 | 2 |
| VK16 | 3 |
| VK17 | 4 |
| VK18 | 5 |
| VK19 | 6 |

## KAJU

| CODE No. | SIZE IN POINT |
|---|---|
| VK01 | 2 |
| VK02 | 3 |
| VK03 | 4 |
| VK04 | 5 |
| VK05 | 6 |

## SQUARE

| CODE No. | SIZE IN POINT |
|---|---|
| VK43 | 2 |
| VK44 | 3 |
| VK45 | 4 |
| VK46 | 5 |
| VK47 | 6 |

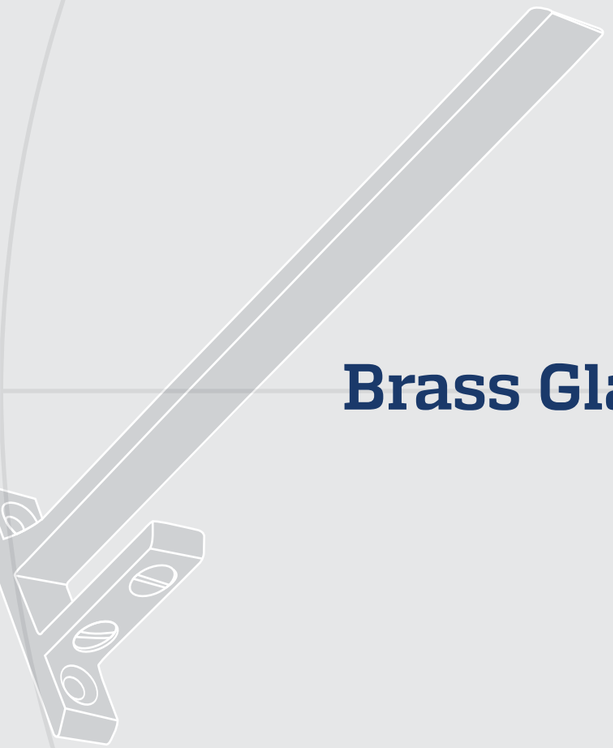

# Brass Glass Fitting



MADHURAM®

A CONTEMPORARY
PIECE BUILT
WITH
EXTRAORDINARY
STRENGTH &
AN EXEMPLARY
FINISH.







## BRASS
## D BRACKET

| CODE No. | SIZE MM | SIZE INCHES | PCS / BOX | SCREW SIZE |
|---|---|---|---|---|
| **XD01** | 37x6 | 1.1/2x6mm | 30 | 4x19 |
| **XD02** | 37x8 | 1.1/2x8mm | 30 | 4x19 |
| **XD04** | 37x12 | 1.1/2x12mm | 30 | 4x19 |
| **XD05** | 50x6 | 2x6mm | 15 | 4x19 |
| **XD06** | 50x8 | 2x8mm | 15 | 4x19 |
| **XD08** | 50x12 | 2x12mm | 15 | 4x19 |



## BRASS
## SQUARE BRACKET

| CODE No. | SIZE MM | SIZE INCHES | PCS / BOX | SCREW SIZE |
|---|---|---|---|---|
| **XS01** | 50x25x6 | 2x1x6mm | 20 | 4x19 |
| **XS02** | 50x25x8 | 2x1x8mm | 20 | 4x19 |
| **XS03** | 50x25x12 | 2x1x12mm | 20 | 4x19 |



## BRASS
## F BRACKET

**HEAVY F BRACKET (ADJUSTABLE)**

| CODE No. | SIZE MM | SIZE INCHES |
|---|---|---|
| **XF16** | 75 | **3** |



## BRASS
## MIRROR SCREW

| CODE No. | SIZE MM | SIZE INCHES | GROOS/ BOX |
|---|---|---|---|
| **XM01** | 12 | 1/2. | 2 |
| **XM02** | 15 | 3/4. | 2 |
| **XM03** | 25 | 1 | 2 |
| **XM04** | 31 | 1.1/4 | 2 |
| **XM05** | 38 | 1.1/2 | 1 |
| **XM06** | 50 | 2 | 1 |
| **XM07** | 62 | 2.1/2 | 1 |
| **XM08** | 75 | 3 | 1 |



## BRASS
## GLASS SLIDING HANDLE

| CODE No. | SIZE MM | SIZE INCHES |
|---|---|---|
| **GSD01** | 150 | 6 |



## BRASS
## L SELF BUTTON

| CODE No. | ITEM TYPE |
|---|---|
| **XB01** | LIGHT (single screw) |
| **XB02** | HEAVY (double screw) |

## BRASS
## GLASS KNOB

| CODE No. | SIZE MM | SIZE INCHES |
|---|---|---|
| **GSK01** | 25 | 1 |
| **GSK02** | 50 | 2 |

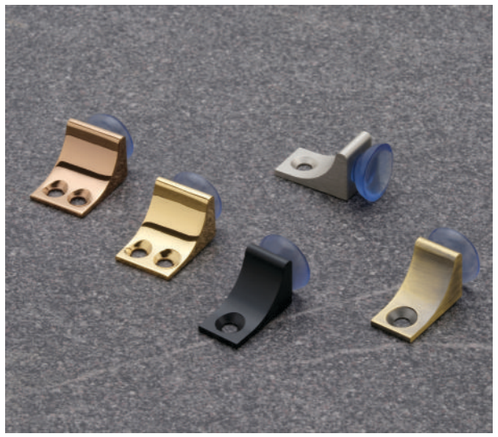



## BRASS
## MIRROR CAP



### "ROUND FLAT"

| CODE No. | SIZE MM | SIZE INCHES | PCS / BOX | SCREW SIZE |
|---|---|---|---|---|
| **YC01** | 12MM | 1/2" | 200 | 6x19 |
| **YC02** | 15MM | 5/8" | 200 | 6x19 |
| **YC03** | 19MM | 3/4" | 200 | 6x19 |
| **YC04** | 25MM | 1" | 100 | 6x19 |
| **YC05** | 31MM | 1.1/4" | 100 | 6x19 |
| **YC06** | 38MM | 1.1/2" | 50 | 6x19 |
| **YC07** | 50MM | 2" | 50 | 6x19 |
| **YC08** | 63MM | 2.1/2" | 20 | 6x19 |
| **YC09** | 75MM | 3" | 20 | 6x19 |



### "SQUARE"

| CODE No. | SIZE MM | SIZE INCHES | PCS / BOX | SCREW SIZE |
|---|---|---|---|---|
| **YC10** | 12MM | 1/2" | 200 | 6x19 |
| **YC11** | 19MM | 3/4" | 200 | 6x19 |
| **YC12** | 25MM | 1'' | 100 | 6x19 |
| **YC13** | 31MM | 1.1/4" | 50 | 6x19 |
| **YC14** | 38MM | 1.1/2" | 50 | 6x19 |
| **YC15** | 50MM | 2" | 30 | 6x19 |



### "DOOMS"

| CODE No. | SIZE MM | SIZE INCHES | PCS / BOX | SCREW SIZE |
|---|---|---|---|---|
| **YC40** | 15MM | 5/8" | 200 | 6x19 |
| **YC41** | 19MM | 3/4" | 200 | 6x19 |
| **YC42** | 25MM | 1" | 100 | 6x19 |
| **YC43** | 38MM | 1.1/2" | 40 | 6x19 |
| **YC44** | 50MM | 2" | 20 | 6x19 |



### "ROYAL PYRAMID"

| CODE No. | SIZE MM | SIZE INCHES | PCS / BOX | SCREW SIZE |
|---|---|---|---|---|
| **YC45** | 25MM | 1" | 50 | 6x19 |
| **YC46** | 31MM | 1.1/4" | 50 | 6x19 |
| **YC47** | 38MM | 1.1/2" | 30 | 6x19 |
| **YC48** | 50MM | 2" | 10 | 6x19 |
| **YC49** | 63MM | 2.1/2 | 5 | 6x19 |
| **YC50** | 75MM | 3 | 5 | 6x19 |

BRASS
## CORNER 6 mm

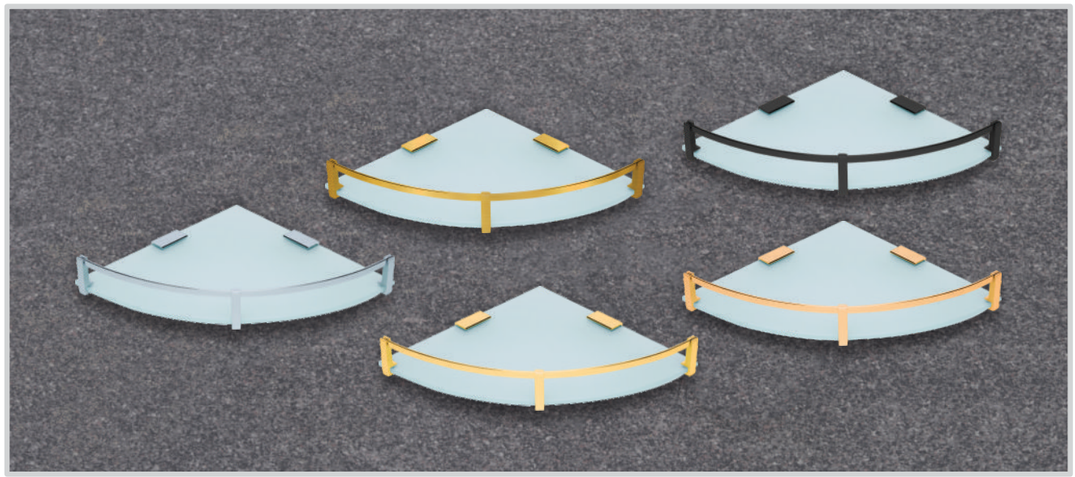

| CODE No. | SIZE INCHES |
|---|---|
| **MBA001** | 8X8 |
| **MBA002** | 10X10 |
| **MBA003** | 12X12 |

BRASS
## SELF 6 mm

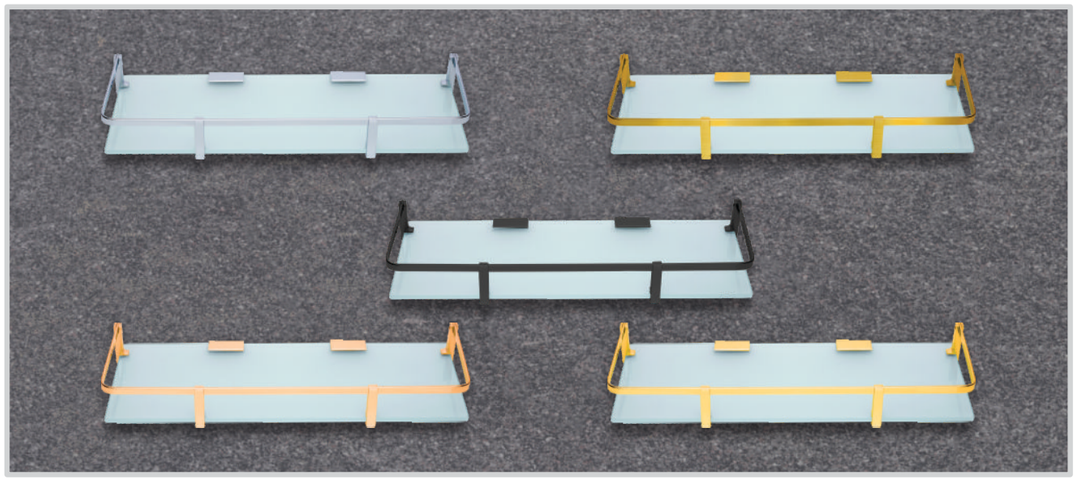

| CODE No. | SIZE INCHES |
|---|---|
| **MBA007** | 5.5x12 |
| **MBA008** | 5.5x15 |
| **MBA009** | 5.5x18 |






## Exclusive Packaging

- All the Madhuram Packaging is crafted with durable material for maximum protection.
- Its Design is Simple, Attractive and Easy to Communicate the products
- Madhuram Packaging with all the layers is Best in the Industry

## Plating Quality

- Madhuram has the in-house plating plant so it controls all the quality checkpoints and that is its biggest strengths
- Madhuram uses the best raw material available for plating
- Madhuram workes with Qualified & Skilled team to achieve the desired result

## Plating Care

- Always protect your Hardware from sharp blows, scratching, chemicals.
- Hardware will age and tarnish naturally so if you want to keep your hardware in pristine condition, clean it regularly, with soft cloth dry or wet.
- Please note that usage of colour, thinner or chemical may affect the plating of hardware, avoid using such while cleaning